

AIR PREPARATION UNIT (FRL)

MODULAR FRL UNITS
Air Filter / Regulator / Lubricator

Advantage

- Easy replacement of the element
- The element and the bowl are in one piece. Replacement can be done with simple tool.
- Reduced required maintenance space: Max. 46% reduction
- Better visibility & safer
- All kinds of combination as you request

How to Use and Maintain

1. Buy the right size units, including filter, regulator, lubricator according to your actual requirements.
Use the right level of filtration, regular filtration is 5um, 20um, 30um, 40um

2. Before installing, please check whether it is damaged or broken during transport and whether any parts are loose.

3. Please install as arrow direction and keep the unit vertical.

4. For units with protection cover, please make sure covers are fixed before use to avoid the danger.

5. For pressure regulator or regular filter, please turn hand wheel to zero position, and then install pressure gauge. Let air go in and turn the wheel to a proper pressure.

6. For lubricator, it is required to adjusted the oil needle to zero position and add the oil below level line.

7. Please remove metal chips, dusts and oils stains in the tubes if you use metal tubes to connect.

8. PC transparent cup of the filter, lubricator are made of PC plastic material, no synthetic oil, organic solvent, chemical, cutting oil, volatile gas are allowed. In order to avoid destruction of material and affect safety of applications.

9. Use spanner to tighten the pressure meter while installing, never tighten with your hand.

10 Follow the torque in table below while tighten the connector, never exceed the range to avoid damage of device.

Torque chart for pipe

Size	Turning Torque N.m
1/8	7-9
1/4	12-14
3/8	22-24
1/2	28-30
3/4	28-30
1	36-38

Danger

1. Please never use for delivering and management of the purpose of human life and body.

2. Never use in operation which rise obvious "Danger" and safety concern to human life and body.

3. Confirmation of safety shall avoid the following conditions which cause safety impact to human and damage of equipment.

Warning

1. Please never use in following situation
- In outdoor dusty condition
- Avoid chemical, corrosive and inflammable gas; avoid sea water, high temperature place in surrounding
- Exceed the condition in the specification of the product
- In the place tend to receive rigorous shock impact, which affect the quality and stability of the products

2. Please do not make any modification or disassemble to the structure, Function of the product

3. Shut off the power switch and sir source properly before service and maintenance, avoid consequent hazard and damage of product.

4. Avoid consequent hazard and damage of product which assembling and operation.

Caution

1. Pay attention to the cleanliness of the pipeline which laying the pipe, avoid dust, dirt and leak proof tape been sucked into the pipeline. it affects the operation performance of the products.

2. Caution for strainer of filter

- The pressure differential type strainer use only for pressure above 1.5 bar
- Automatic float ball strainer use only for pressure above 1 bar
- Care for the cleanliness of air and PC cups, avoid clogged by debris and dirt cause poor function of the strainer and leak

If you have any technique question,
please contact us sales@xhnotion.com

Modular FRL Unit

D Series

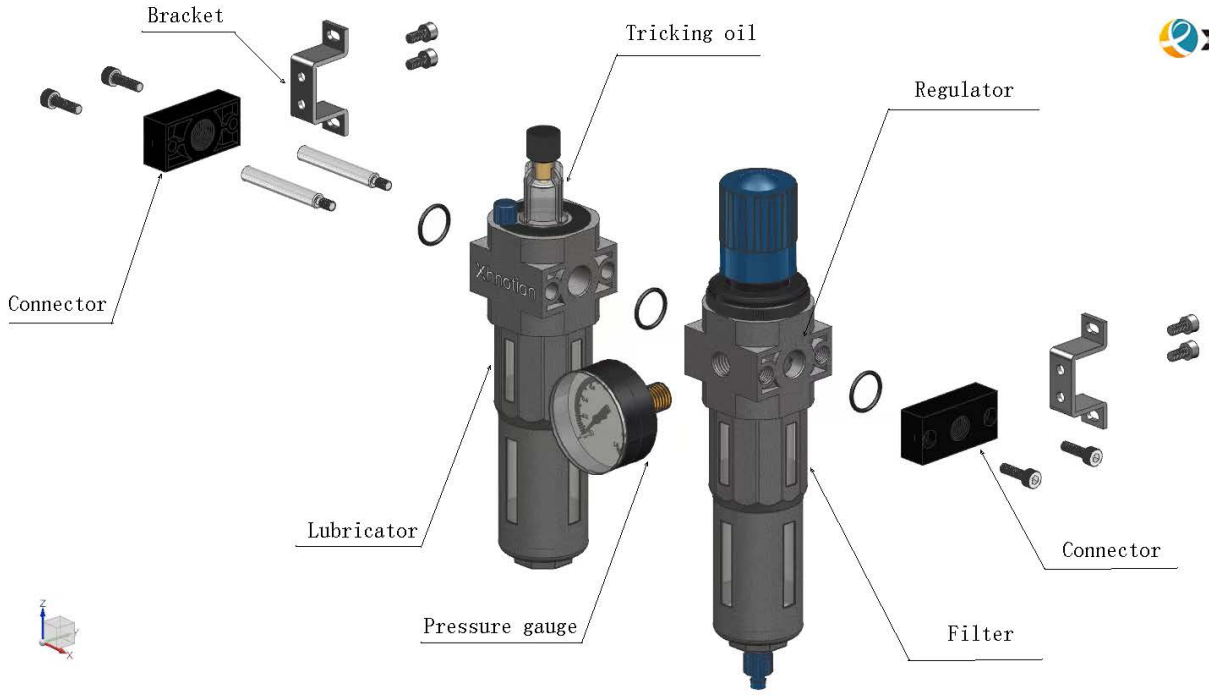

Features

1. D series is equivalent to Festo air preparation.

2. Increase the service life of pneumatic components and system by mixing the sizes for FRL unit, you can enjoy optimum flow rates with smaller sizes and lower costs.

3. Compatible with pressure switches, soft start valve and safety pressure relief valve.

Symbol

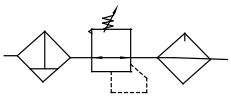

How to Order

D	C	200	—	01	D
Model	Type	Body Size		Port Size	Drain Type
D Type	C: Three Combination or Two Combination FR: Filter&Regulator R: Air Regulator L: Air Lubricator F: Air Filter	100 200 400 600 Two combination 101 201 401 601		M5: M5X0.8 01: G1/8" 02: G1/4" 03: G3/8" 04: G1/2" 06: G3/4" 08: 1"	Blank: Manual drain D: Auto-Drain

DC100-600 Series



Type	DC100-M5,01	DC200-01,02,03	DC400-03,04,06	DC600-06,08
Port Size	M5•1/8"	1/8"•1/4"•3/8"	3/8"•1/2"•3/4"	3/4"•1"
Gauge Thread (G)	M5	1/8"	1/4"	
Fluid	Compressed Air			
Operating Pressure Range (MPa)	0.15-0.85	0.15-1.2		
Max.Flow Rate (L/min)	500	1700	3500	11500
Ambient Temperture (℃)	-10-60			
Filter Precision	5um or 40um			
Structure	Overflow Type			
Guard Cup	-	•	•	•

Symbol

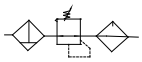

DC100

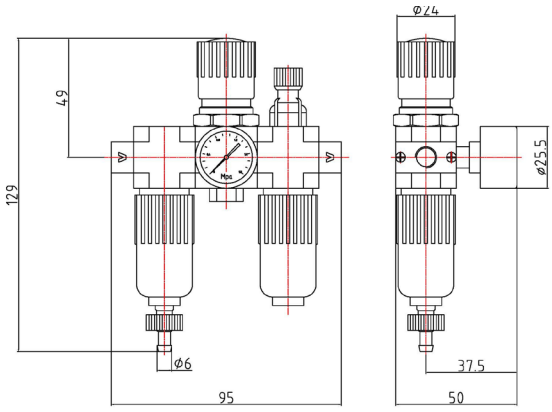

DC200

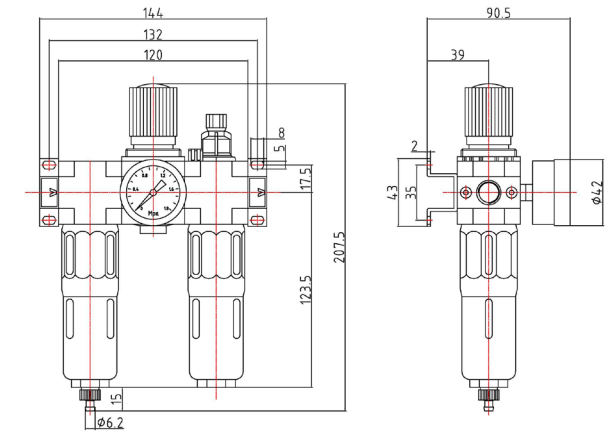

DC400

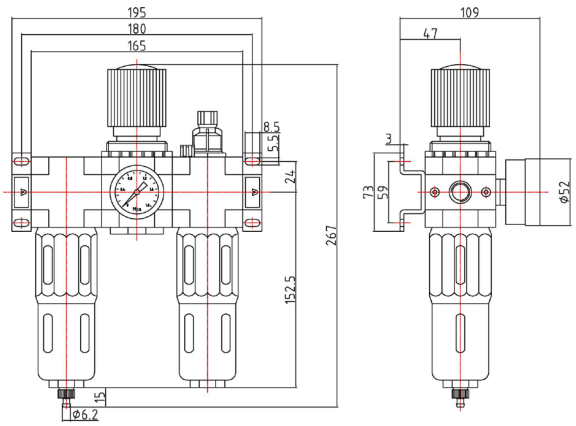

DC600

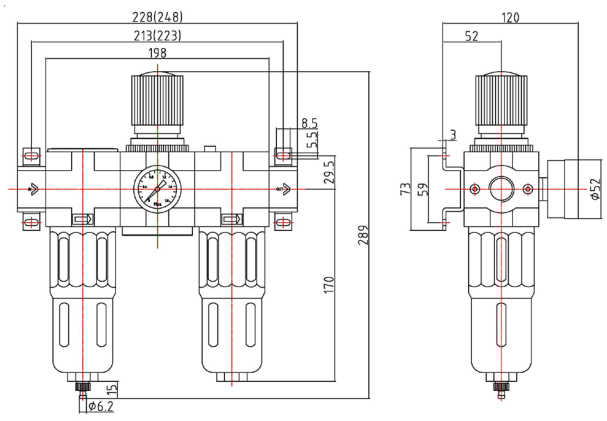

Modular FRL Unit

D Series

DC101-601 Series



Type	DC101-M5, 01	DC201-01,02,03	DC401-03,04,06	DC601-06, 08
Port Size	M5•1/8"	1/8"•1/4"•3/8"	3/8"•1/2"•3/4"	3/4"•1"
Gauge Thread (G)	M5	1/8"	1/4"	
Fluid	Compressed Air			
Operating Pressure Range (MPa)	0.15-0.85	0.15-1.2		
Max.Flow Rate (L/min)	500	1700	3500	11500
Ambient Temperture (℃)	-10-60			
Filter Precision	5um or 40um			
Structure	Overflow type			
Guard Cup	-	•	•	•

Symbol

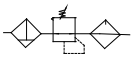

DC101

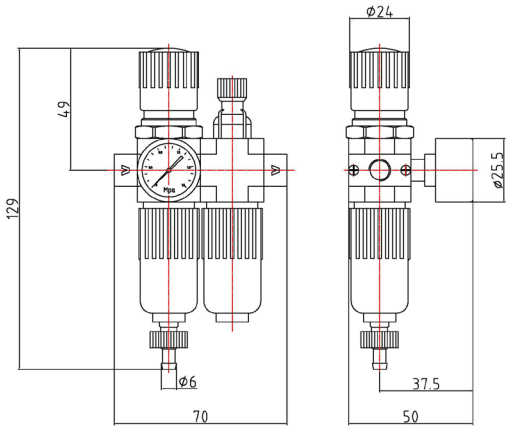

DC201

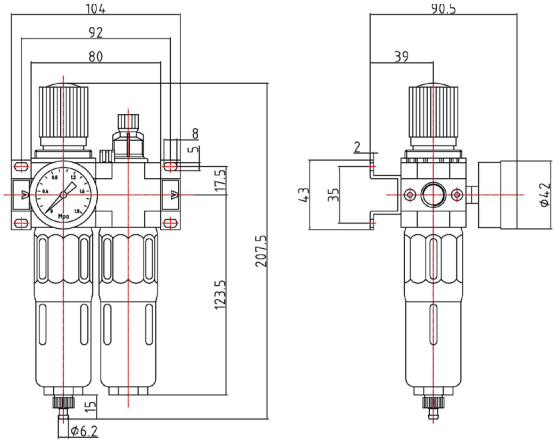

DC401

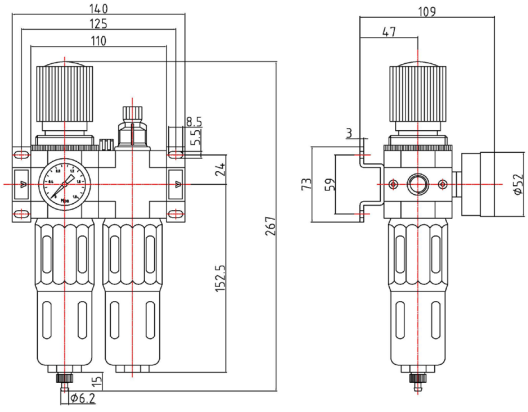

DC601

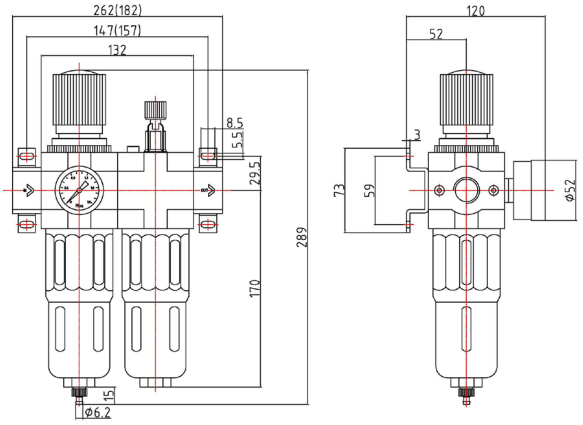

DR100-600 Series



Type	DR100-M5, 01	DR200-01,02,03	DR400-03,04,06	DR600-06, 08
Port Size	M5•1/8"	1/8"•1/4"•3/8"	3/8"•1/2"•3/4"	3/4"•1"
Gauge Thread (G)	M5	1/8"	1/4"	
Fluid	Compressed Air			
Operating Pressure Range (MPa)	0.15-0.85	0.15-1.2		
Max.Flow Rate (L/min)	500	1700	3500	11500
Ambient Temperture (℃)	-10-60			

Symbol



DR100

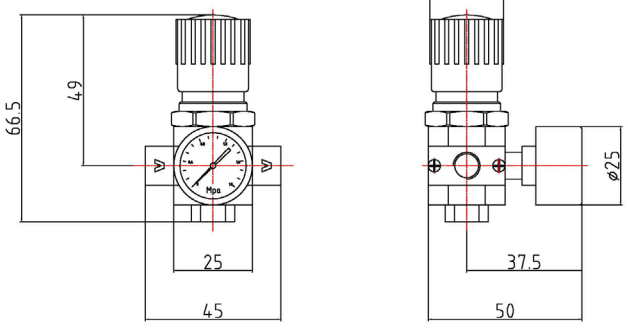

DR200

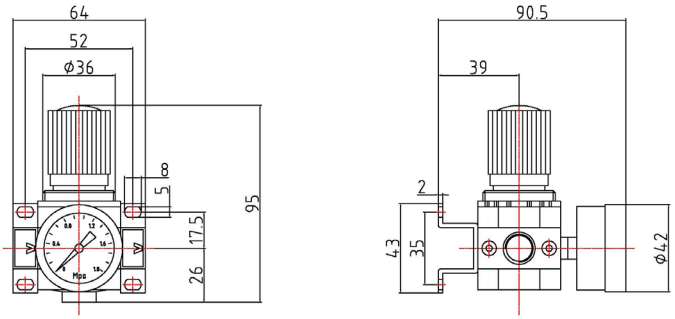

DR400

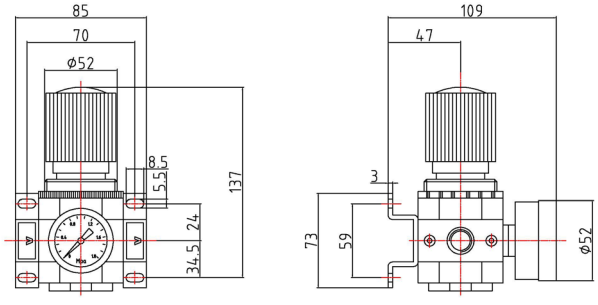

DR600

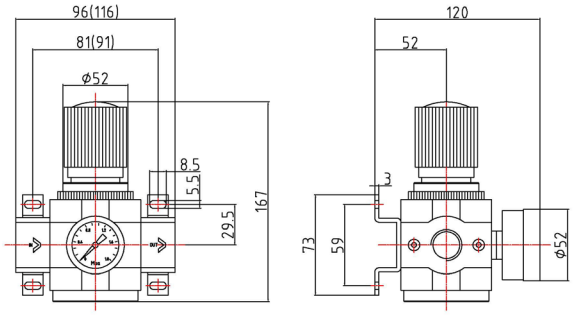

DL100-600 Series



Type	DL100-M5, 01	DL200-01,02,03	DL400-03,04,06	DL600-06, 08
Port Size	M5•1/8"	1/8"•1/4"•3/8"	3/8"•1/2"•3/4"	3/4"•1"
Fluid	Compressed Air			
Operating Pressure Range (MPa)	0.15-0.85	0.15-1.2		
Max.Flow Rate (L/min)	500	1700	3500	11500
Ambient Temperture (℃)	-10-60			
Structure	Overflow Type			
Guard Cup	-	•	•	•

Symbol

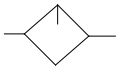

DL100

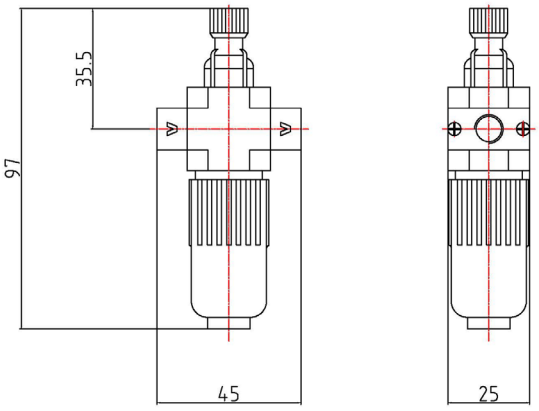

DL200

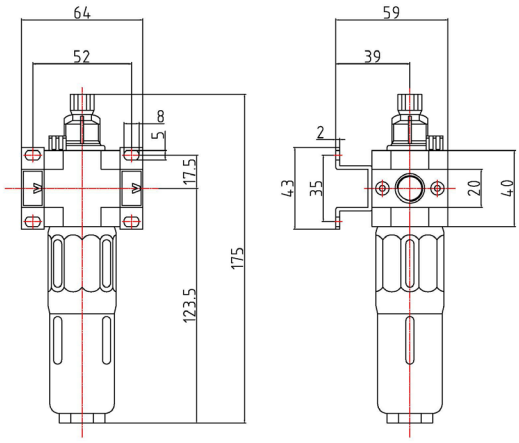

DL400

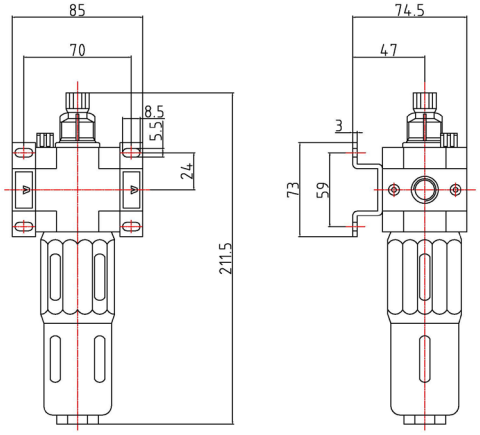

DL600

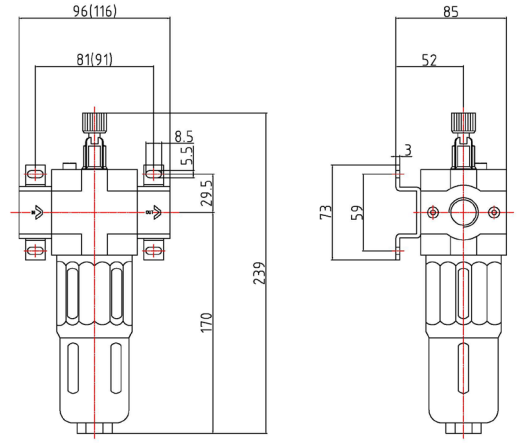

DF100-600 Series



Type	DF100-M5, 01	DF200-01,02,03	DF400-03,04,06	DF600-06,08
Port Size	M5•1/8"	1/8"•1/4"•3/8"	3/8"•1/2"•3/4"	3/4"•1"
Fluid	Compressed Air			
Operating Pressure Range (MPa)	0.15-0.85	0.15-1.2		
Max.Flow Rate (L/min)	500	1700	3500	11500
Ambient Temperture (℃)	-10-60			
Filter Precision	5um or 40um			
Structure	Overflow Type			
Guard Cup	-	•	•	•

Symbol



DF100

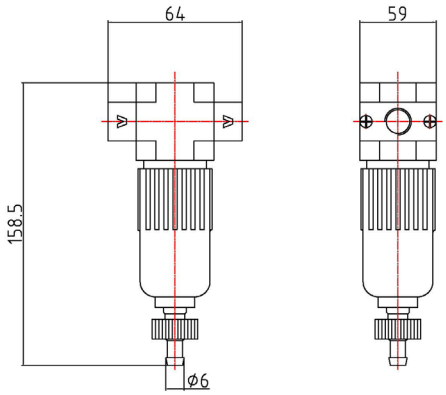

DF200

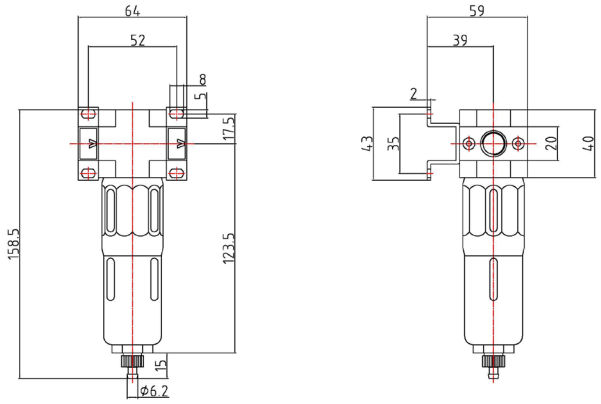

DF400

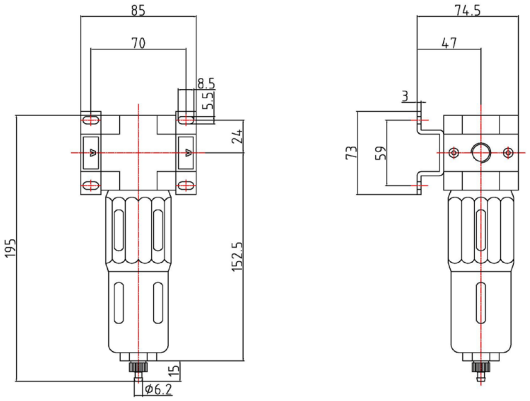

DF600

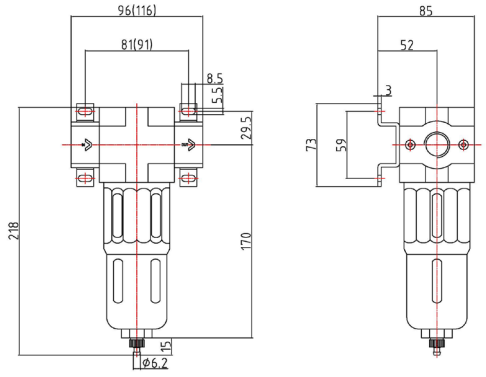

Modular FRL Unit

D Series

DFR100-600 Series



Type	DFR100-M5, 01	DFR200-01,02,03	DFR400-03, 04, 06	DFR600-06, 08
Port Size	M5•1/8"	1/8"•1/4"•3/8"	3/8"•1/2"•3/4"	3/4"•1"
Gauge Thread (G)	M5	1/8"	1/4"	
Fluid	Compressed Air			
Operating Pressure Range (MPa)	0.15-0.85	0.15-1.2		
Max.Flow Rate (L/min)	500	1700	3500	11500
Ambient Temperture (℃)	-10-60			
Filter Precision	5um or 40um			
Structure	Overflow Type			
Guard Cup	-	•	•	•

Symbol

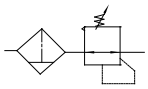

DFR100

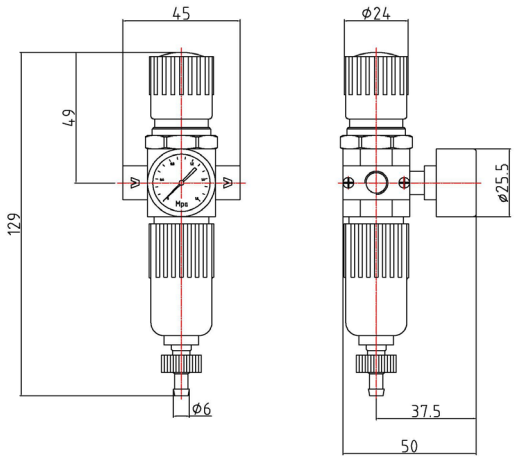

DFR200

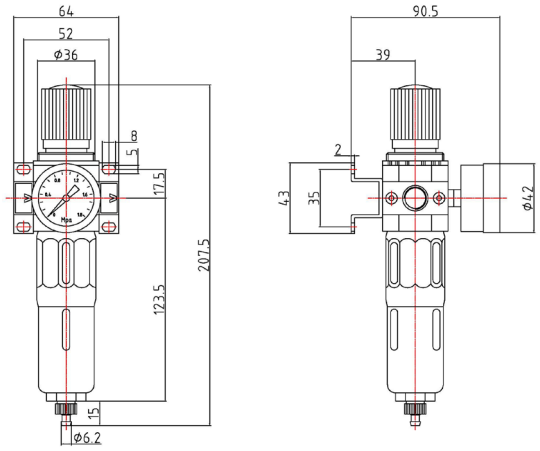

DFR400

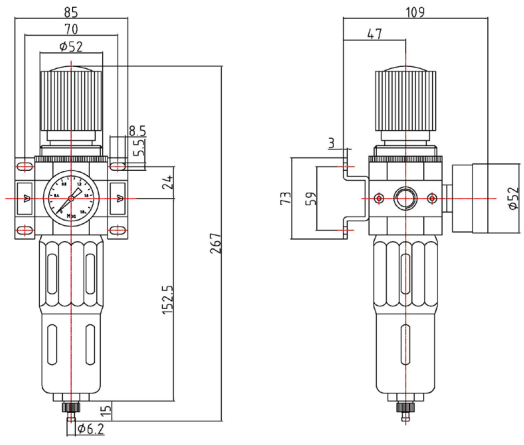

DFR600

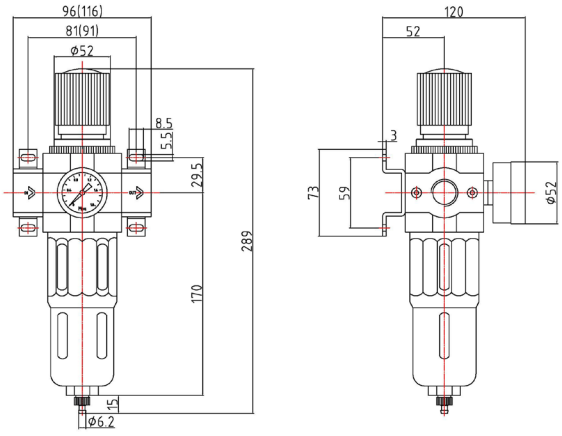

DRB Series



Features

The regulator for an integrated installation, can provide a variety of different pressure gas source, the front and rear sides of each one has a output connection.

Type	DRB200-01, 02, 03	DRB400-03, 04, 06
Port Size	1/8"•1/4"•3/8"	3/8"•1/2"•3/4"
Fluid	Compressed Air	
Operating Pressure Range (MPa)	0.15-0.85	
Max.Flow Rate (L/min)	1700	3500
Ambient Temperture (℃)	-10-60	

DRB200

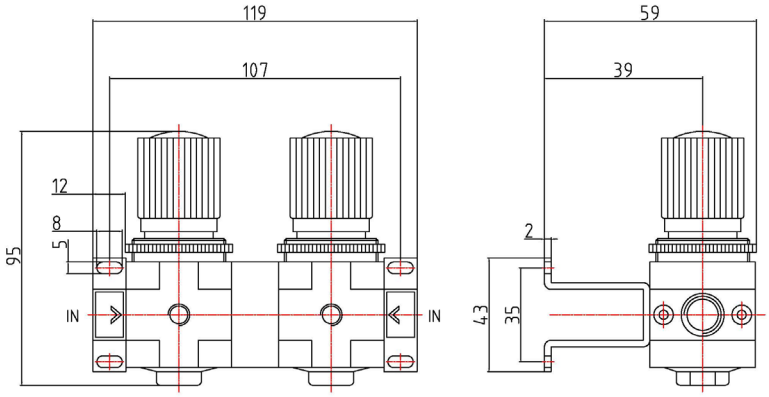

Symbol

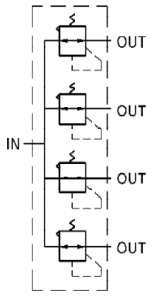

DRB400

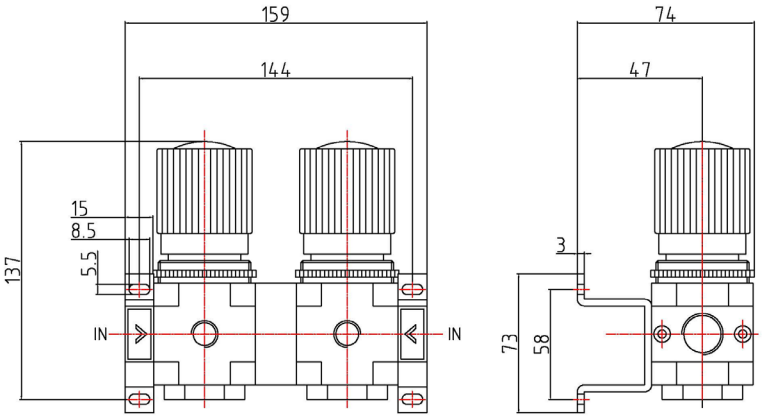

DZ Series





DFR200

Features

1. This valve can be used as manual 3/2 valve.
2. When the machinery is maintained and serviced, the valve for remaining pressure shall be used to eliminate the remaining pressure when the air source is cut off.

Type	DZ200-01, 02, 03	DZ400-03, 04, 06	DZ600-06, 08
Port Size	1/8"•1/4"•3/8"	3/8"•1/1"•3/4"	3/4"•1"
Fluid	Compressed Air		
Operating Pressure Range (MPa)	0.15-0.85		
Ambient Temperture (℃)	-5-60		
Acting Type	Manual		
Valve Type	2 Way 3 Position		
Operating Angle	90°		
Exhaust Port Size	1/8"	3/8"	1/2"
Suitable FRL Type	DC200-01, 02, 03	DC400-03, 04, 06	DC600-06, 08

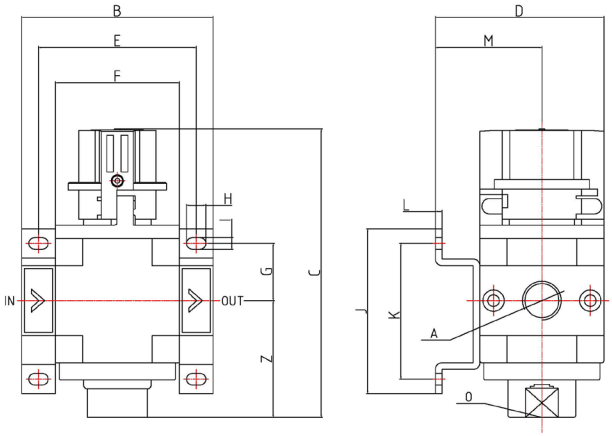

Symbol

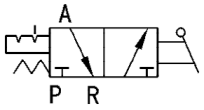

Model	DZ200			DZ400			DZ600	
	01	02	03	03	04	06	06	08
A	1/8"	1/4"	3/8"	3/8"	1/2"	3/4"	3/4"	1"
B	64			85			106	
C	106			127			-	
D	59			74.5			77.5	
E	52			70			86	
F	40			55			66	
G	17.5			24			27.5	
H	8			8.5			11.5	
I	5			5.5			5.5	
J	43			73.5			66.5	
K	35			58			55	
L	2			3			3	
M	39			47			44.5	
N	38.5			51			-	
O	1/8"			3/8"			3/4"	

Features

High Pressure Regulator: Compressed air can be adjusted from 4Mpa to 3Mpa and kept steady-going.

High Pressure Filter: It is suitable to filter the solid and fluent impurity. the compressed air blow at 4 Mpa.

How to Order

Q	TY	H	—	04
Model	Type	High Pressure		Port Size:
Regulator	TY: Regulator SL: Filter FR: Filter Regulator			02: G1/4" 03: G3/8" 04: G1/2" 06: G3/4" 08: G1"

High Pressure Regulator



Symbol



Type	QTYH-02	QTYH-03	QTYH-04	QTYH-06	QTYH-08
Port size (G)	1/4"	3/8"	1/2"	3/4"	1"
Fluid	Compressed Air				
Operating Pressure Range (Mpa)	0.05-3				
Max. Working Pressure (Mpa)	4				
Ambient Temperature (°C)	-10—70				

QTYH-02,03,04

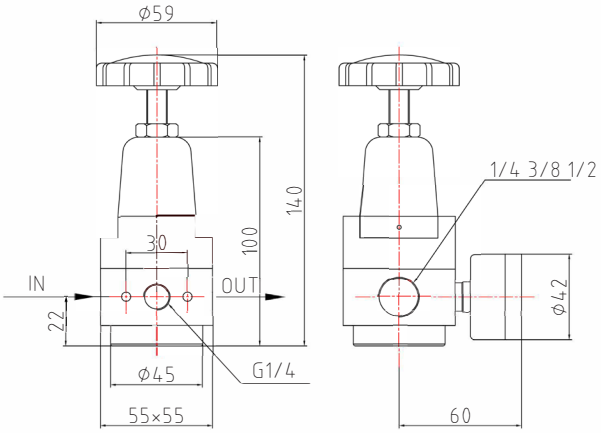

QTYH-06,08

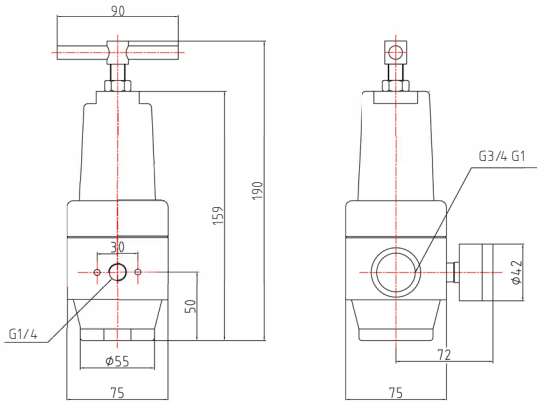

High Pressure Filter



Symbol



Type	QSLH-02	QSLH-03	QSLH-04	QSLH-06	QSLH-08
Port Size (G)	1/4"	3/8"	1/2"	3/4"	1"
Fluid	Compressed Air				
Operating Pressure Range (Mpa)	0.05-3				
Max. Working Pressure (Mpa)	4				
Filter Precision	5um or 40um				
Ambient Temperature (°C)	-10—70				

QSLH-02,03,04

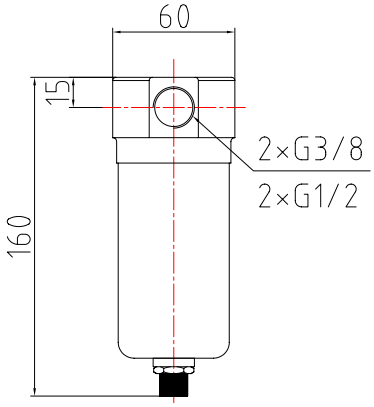

QSLH-06,08

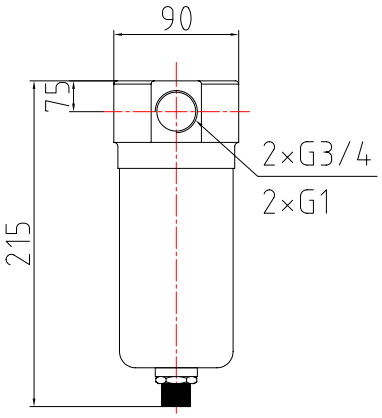

High pressure Filter Regluator



Symbol

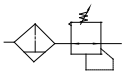

Type	QFRH-02	QFRH-03	QFRH-04	QFRH-06	QFRH-08
Port Size (G)	1/4"	3/8"	1/2"	3/4"	1"
Fluid	Compressed Air				
Operating Pressure Range (Mpa)	0.05-3				
Max. Working Pressure (Mpa)	4				
Ambient Temperature (°C)	- 10—70				

QFRH-02,03,04

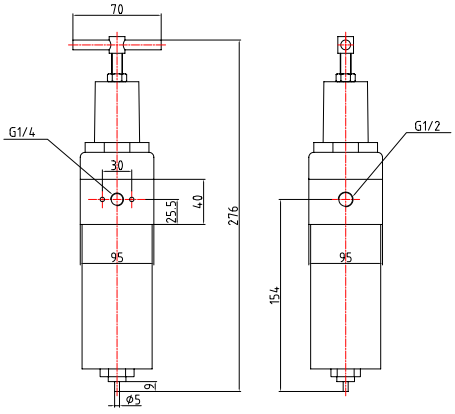

QFRH-06,08

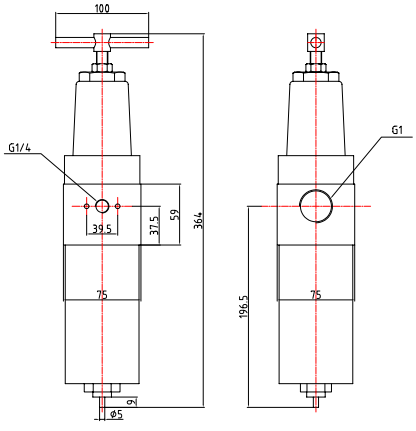

Provided with a controlled air escape which is able to achieve highly accurate pressure adjustment. High stability with low load losses and big flow rate. Downstream overpressure quickly eliminated.



Overall Dimension Drawing

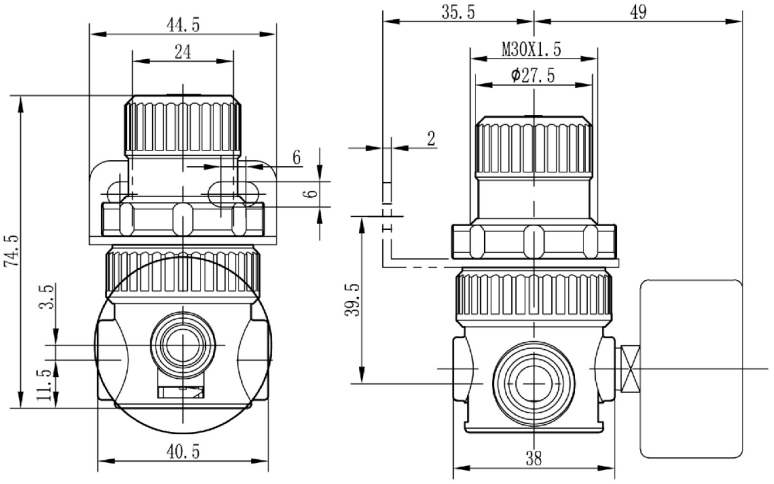

How to Order

HM	R	P	2000	—	01
Series	Type R: Regulator	P: Always Relieving Blank: Relieving	Size		Port size: 01: G1/8" 02: G1/4"

Symbol

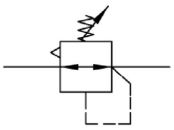

Model	HMRP2000-01	HMRP2000-02	HMR2000-01	HMR2000-02
Operating Fluid	Filtered Compressed Air			
Port Size	G1/8"	G1/4"	G1/8"	G1/4"
Gauge Port Size	G1/8"			
*Filter Precision	25u			
Regulating Pressure Range	0.05~0.8MPa			
Highest Working Pressure	1.6Mpa			
Ambient Fluid Temperature	5-50℃			
Flow Rate	450L/min			
Weight	160g			

*5/50um availlable in addition

Modular FRL Unit

Precision Regulator

Feature:

- Compact and light weight.
- Flow rate is 20% higher than that of traditional ones(Max. Flow Rate:1 L/min).
- Exhaust rate is 5 times than that of traditional ones.
- Precise pressure setting.
- Easy for mounting, capable of mounting individually, together with modular filter combination and mounting on panel.
- Piloted exhaust and main exhaust are separated.

Symbol

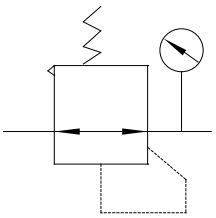



Model		IR2000-4120
Sensitivity		Within 0.2% of full span
Repeatability		Within ±0.5% of full span
Effective sectional area	IR2000	3.5L/min(ANR) or less at supply pressure 1.0MPa. Exhaust port: 3L/min(ANR) or less at maximum set pressure.
	IR3000	
	IR4000	
Ambientand Fluid Temperature		-5~+60℃ (No freezing)
Highest Working Pressure		1.0MPa
Pressure gauge port		G1/8

Overall Dimension Drawing

IR20

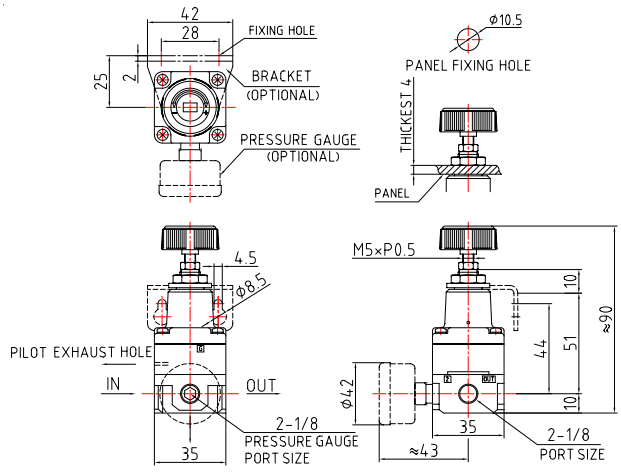

How to Order

IR	3000	02
Precision Regulator	Settled pressure 2000 2010 3000 3010 3020 4000 4010 4020 4120	Port size: 02: G1/4" 03: G3/8" 04: G1/2"

IR30

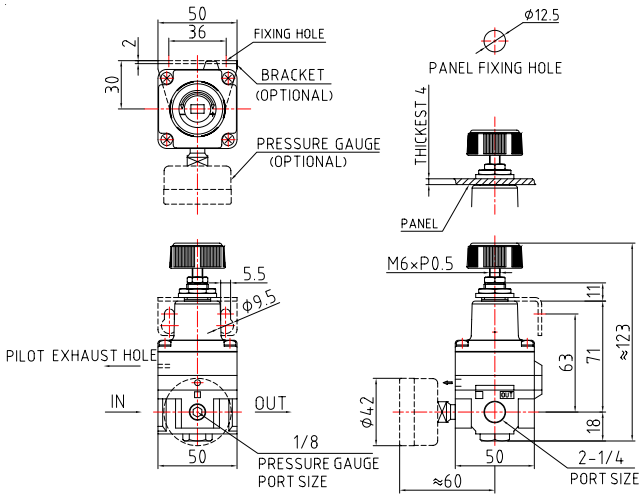

IR40

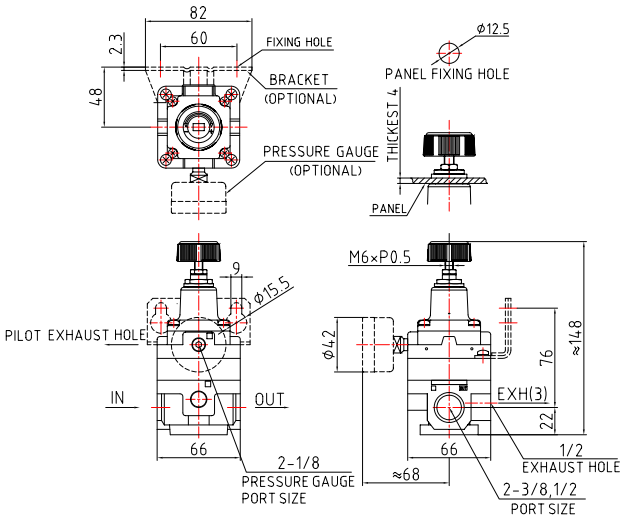

IR31

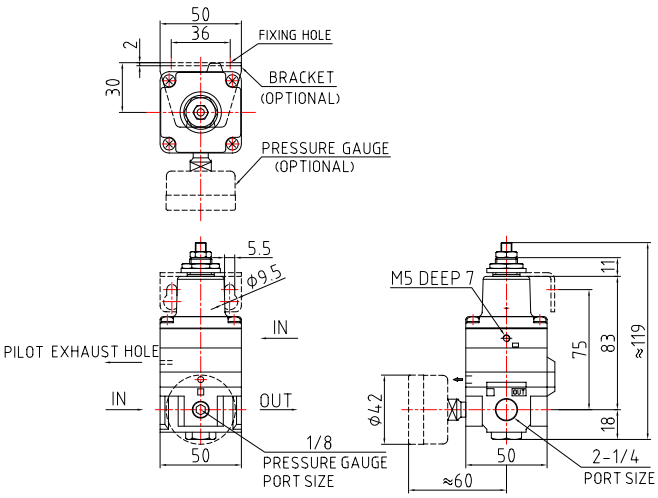

IR41

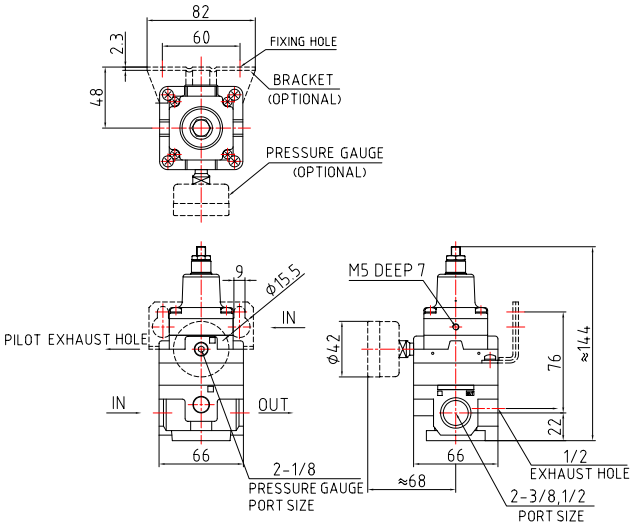

Specifications

Type		Specifications			Accessories	
		Minimum working pressure(MPa)	Set pressure range(MPa)	Port Size	Pressure gauge type	Bracket type
Standard type	IR2000-01	Set pressure +0.05	0.01~0.2	1/8	G36-2-01	B2-IR
	IR2010-01		0.01~0.4		G36-4-01	
	IR2020-01		0.01~0.8		G36-10-01	
	IR3000-02		0.01~0.2	1/4	G36-2-01	B3-IR
	IR3010-02		0.01~0.4		G36-4-01	
	IR3020-02		0.01~0.8		G36-10-01	
	IR4000-□	Set pressure +0.1	0.01~0.2	3/8~1/2	G36-2-01	B4-IR
	IR4010-□		0.01~0.4		G36-4-01	
	IR4020-□		0.01~0.8		G36-10-01	
Air operated type	IR3120-02	Set pressure +0.05	0.01~0.8	1/4	G36-10-01	B3-IR
	IR4120-□	Set pressure +0.1	0.01~0.8	3/8~1/2	G36-10-01	B4-IR

Modular FRL Unit

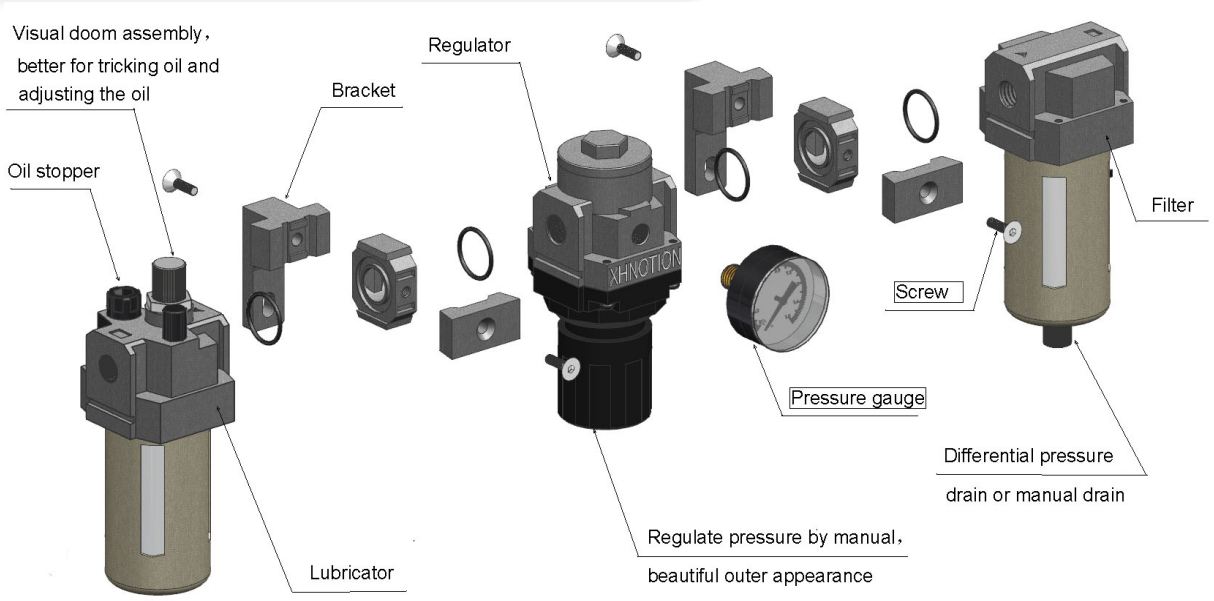

How to Order

ACG 2000-01D

- Drain Type
  - Blank: Semi-automatic
  - D: Automatic
- Port size
  - M5: M5X0.8
  - 01: G1/8"
  - 02 G 1/4"
  - 03 G 3/8"
  - 04 G 1/2"
  - 06: G3/4"
  - 10: 1"
- Body Size
  - 1000
  - 2000
  - 2500
  - 3000
  - 4000
  - 5000
  - Two combination
    - 1010
    - 2010
    - 3010
    - 4010
    - 5010
- Body Size
- Gauge installation
  - Blank: The old General Circular Gauge
  - E: Embedded Square Gauge
  - G: The New General Circular Gauge
- Type
  - C: Three combination or Two combination
  - W: Filter&Regulator
  - R: Air regulator
  - L: Air Lubricator
  - F: Air filter
- Model
  - A
  - X
  - HA
  - HNA

Ensured Pressure Resistance	1.5MPa(15kgf/cm²)
Highest Working Pressure	1.0MPa(10kgf/cm²)
Ambient and Fluid Temperature	5-60 Celsius Degree
*Filter Precision	25um
Recommended Oil Use	Turbine No.1 Oil ISOCG32
Container Material	Polycarbonate
Protective Cover	1000-2000(Not Available) 2500-5000(Available)
Pressure Regulating Range	0.05-0.7MPa(0.5-7kgf/cm²)
	0.05-0.85MPa(0.5-8.5kgf/cm²)
Valve Type	With Overflow

AC1000-5000 Series





Symbol

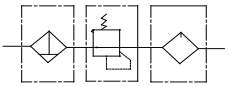

Model	Assembly			Specification				Bracket
	Filter	Regulator	Lubricator	Flow Rate* (L/min)	SCFM* Cubic Feet / min	Port Size	Weight(Kg)	
AC1000-M5	AF1000	AR1000	AL1000	90	3.2	M5	0.26	Y10L
AC2000-01	AF2000	AR2000	AL2000	500	17.7	1/8"	0.74	Y20L
AC2000-02						1/4"		
AC2500-02	AF3000	AR2500	AL3000	1500	53	1/4"	1.04	Y30L
AC2500--03						3/8"		
AC3000-02	AF3000	AR3000	AL3000	2000	71	1/4"	1.18	Y30L
AC3000-03						3/8"		
AC4000-03	AF4000	AR 000	AL4000	4000	141	3/8"	2.14	Y40L
AC4000-04						1/2"		
AC4000-06	AF 4000-06	AR4000-06	AL4000-06	4500	159	3/4"	2.47	Y50L
AC5000-06	AF 5000	AR 5000	AL 5000	5000	177	3/4"	3.82	Y60L
AC5000-10						1"		

*Under the circumstance that the supply pressure is 0.7MPa(7.1kgf/cm²) and set pressure is 0.5MPa(5.1kgf/cm)
BSPT and NPT port size are available

Overall Dimension Drawing

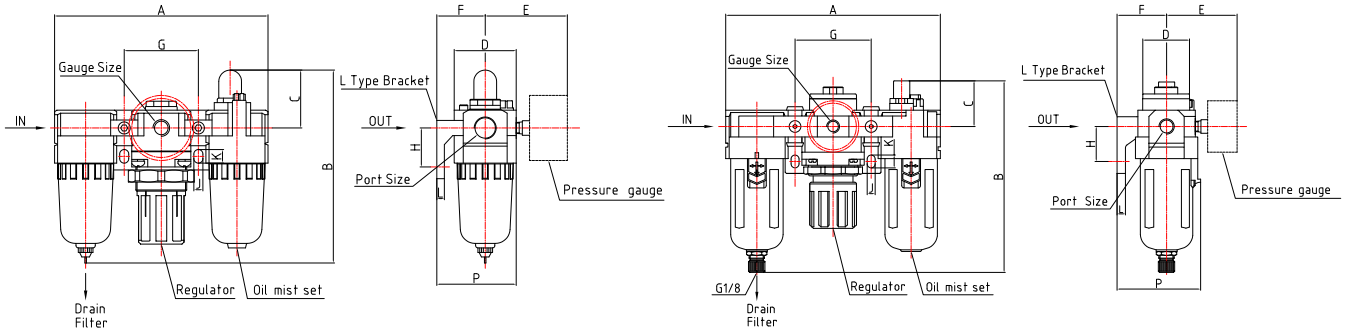

Model	Port Size	A	B	C	D	E	F	G	H	J	K	L	P	*With auto drain B
AC1000	M5	91	91	25.5	25	26	25	33	20	4.5	7.5	5	38.5	-
AC2000	1/8", 1/4"	140	122	38	40	56.8	30	50	24	5.5	8.5	5	50	145
AC2500	1/4", 3/8"	181	158	38	53	60.8	41	64	35	7	11	7	70.5	172
AC3000	1/4", 3/8"	181	158	38	53	60.8	41	64	35	7	11	7	70.5	172
AC4000	3/8", 1/2"	238	191	41	70	65.5	50	84	40	9	13	7	88	196
AC4000-06	3/4"	253	191	40.5	70	69.5	50	89	40	9	13	7	88	196
AC5000	3/4", 1"	300	268	48	90	75.5	69.8	105	50	12	16	10.5	115	273

Modular FRL Unit

A Series

AC1010-5010 Series





Symbol

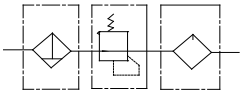

Model	Assembly		Specification				Bracket
	Filter	Lubricator	Flow Rate* (L/min)	SCFM* Cubic Feet /min	Port Size	Weight(Kg)	
AC1010-M5	AW1000	AL 1000	90	3.2	M5	0.22	Y10T
AC2010-01	AW2000	AL 2000	500	17.7	1/8"	0.66	Y20T
AC2010-02					1/4"		
AC3010-02	AW3000	AL3000	1700	60	1/4"	0.98	Y30T
AC3010--03					3/8"		
AC4010-03	AW4000	AL4000	3000	106	3/8"	1.93	Y40T
AC4010-04					1/2"		
AC4010-06	AW4000-06	AL4000-06	3000	106	3/4"	1.99	Y50T
AC5010-06	AW5000	AL5000	4000	141	3/4"	3.20	Y60T
AC5010-10					1		

Overall Dimension Drawing

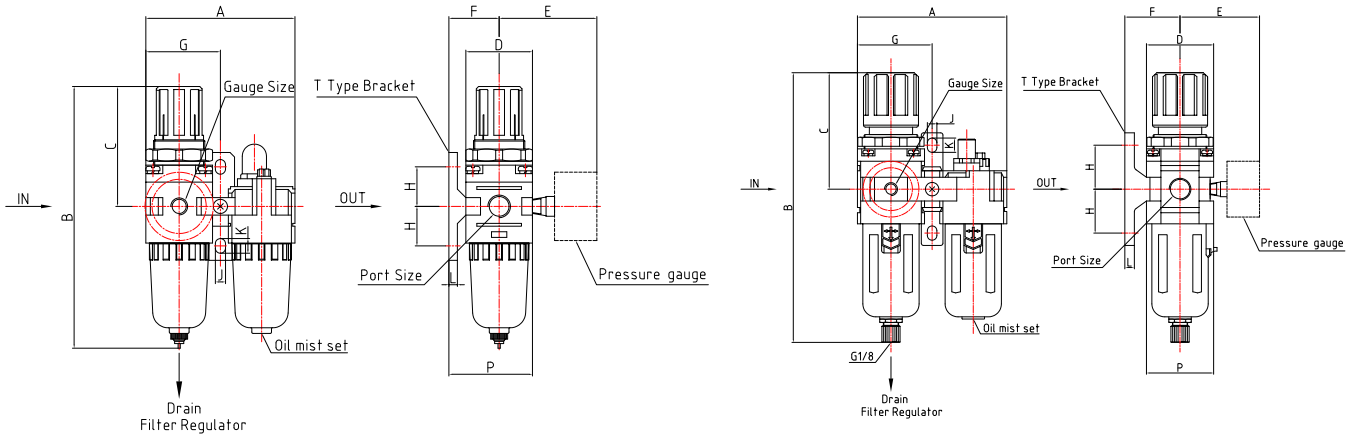

Dimension Sheet (mm)

Model	Port Size	A	B	C	D	E	F	G	H	J	K	L	P	*With auto drain B
AC1010	M5	58	113	50.5	25	26	25	29	20	4.5	7.5	5	38.5	-
AC2010	1/8", 1/4"	90	158	78	40	56.8	30	45	24	5.5	8.5	5	50	197
AC3010	1/4", 3/8"	117	208	92.5	53	60.8	41	58.8	35	7	11	7	70.5	223
AC4010	3/8", 1/2"	154	256	112	70	70.5	50	77	40	9	13	7	88	262
AC4010-06	3/4"	164	261	114	70	70.5	50	82	40	9	13	7	88	266
AC5010	3/4", 1"	195	338	116	90	75.5	69.8	97.5	50	12	16	10.5	115	343

AF1000-5000 Series



Symbol

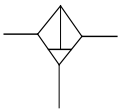

Model	Specification					Bracket	Drain Function	Auto Drain Model
	Flow Rate* (L/min)	SCFM* Cubic Feet / min	Port Size	Bowl Capacity (cm^3)	Weight(Kg)			
AF1000-M5	110	3.9	M5	4	0.07	-	Manual Drain	-
AF2000-01	750	26.5	1/8"	15	0.19	B240		AF2000-01D
AF2000-02			1/4"					AF2000-02D
AF3000-02	1500	53	1/4"	20	0.29	B340	a.AirShutoff Drain	AF3000-02D
AF3000--03			3/8"					AF3000--03D
AF4000-03	4000	141	3/8"	45	0.55	B440		AF4000-03D
AF4000-04			1/2"					AF4000-04D
AF4000-06	6000	212	3/4"	45	0.58	B540		AF4000-06D
AF5000-06	7000	247	3/4"	130	1.08	B640	b.Manual Drain	AF5000-06D
AF5000-10			1					AF5000-10D

Overall Dimension Drawing

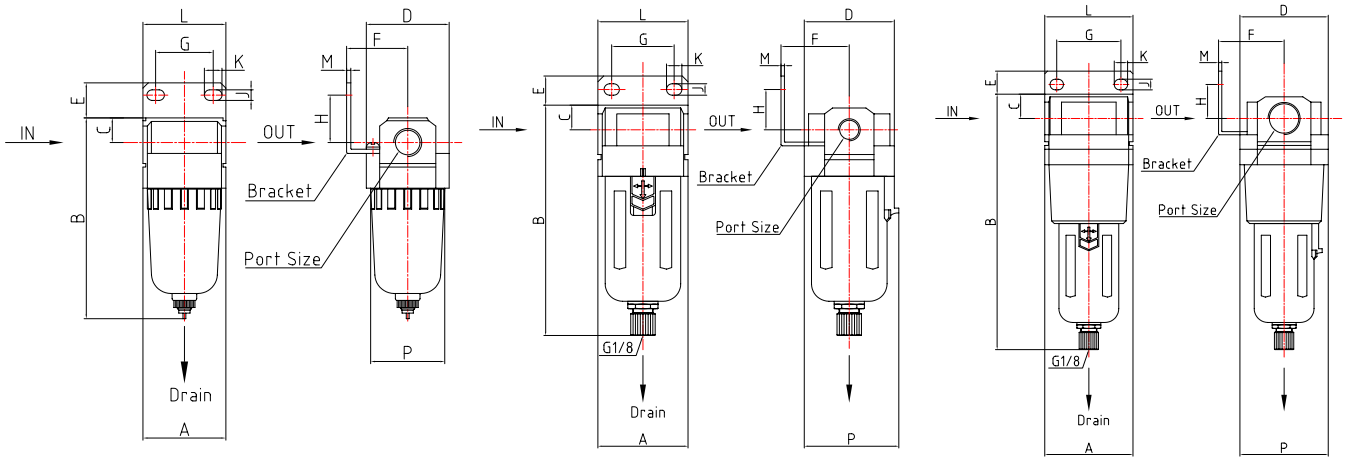

Dimension Sheet (mm)

Model	Port Size	A	B	C	D	E	F	G	H	J	K	L	P	*With auto drain B
AF1000	M5	25	72	7	25	-	-	-	-	-	-	-	26.5	-
AF2000	1/8", 1/4"	40	97.5	11	40	17	30	27	22	5.4	8.4	40	40	134
AF3000	1/4", 3/8"	53	132.5	14	53	16	41	40	23	6.5	8	53	56	148
AF4000	3/8", 1/2"	70	168.5	18	70	17	50	54	26	8.5	10.5	70	73	173
AF4000-06	3/4"	75	172.5	20	70	14	50	54	25	8.5	10.5	70	73	177
AF5000	3/4", 1"	90	247.5	24	90	23	66.5	66	35	11	13	90	90	252

Modular FRL Unit

A Series

AR1000-5000 Series



Symbol

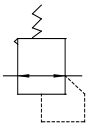

Model	Specification				Bracket
	Flow Rate* (L/min)	Pressure Gauge Size (G)	Port Size	Weight(Kg)	
AR1000-M5	110	1/16"	M5	0.08	B120
AR2000-01	550	1/8"	1/8"	0.27	B220
AR2000-02			1/4"		
AR2500-02	2000	1/8"	1/4"	0.27	B220
AR2500-03			3/8"		
AR3000-02	2500	1/8"	1/4"	0.41	B320
AR3000--03			3/8"		
AR4000-03	6000	1/4"	3/8"	0.84	B420
AR4000-04			1/2"		
AR4000-06	6000	1/4"	3/4"	0.94	
AR5000-06	8000	1/4“	3/4"	1.19	
AR5000-10			1		

Overall Dimension Drawing

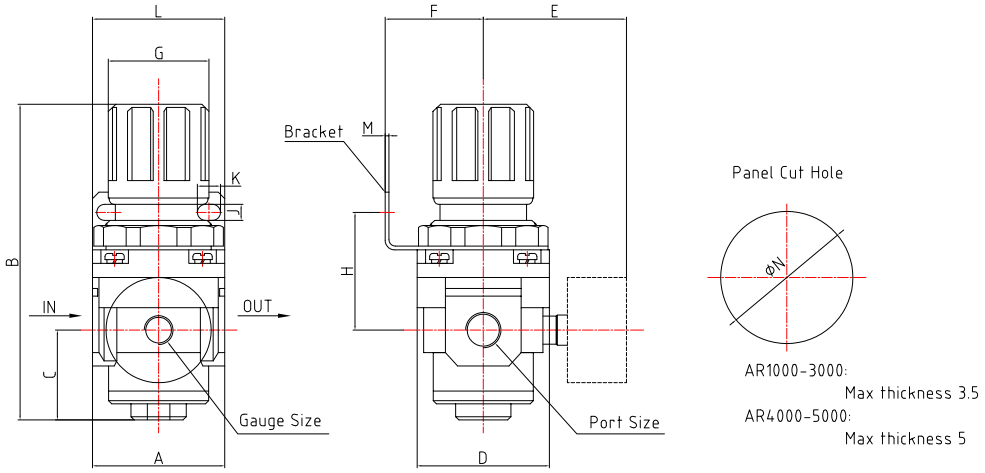

Dimension Sheet (mm)

Model	Port Size	A	B	C	D	E	F	G	H	J	K	L	M	N
AR1000	M5	25	61.5	11	25	26	25	28	30	4.5	6.5	40	2	20.5
AR2000	1/8", 1/4"	40	95	17	40	56.8	30	34	44	5.4	15.4	55	2.3	33.5
AR2500	1/4", 3/8"	53	102.5	25	48	60.8	30	34	44	5.4	15.4	55	2.3	33.5
AR3000	1/4", 3/8"	53	127.5	35	53	60.8	39	40	46	6.5	8	53	2.3	42.5
AR4000	3/8", 1/2"	70	149.5	37.5	70	65.5	49.2	54	54	8.5	10.5	70	2.3	52.5
AR4000-06	3/4"	75	154	40.5	70	69.5	49.2	54	55.5	8.5	10.5	70	2.3	52.5
AR5000	3/4", 1"	90	168	48	90	75.5	49.2	54	62	8.5	10.5	70	2.3	52.5

AL1000-5000 Series





Symbol

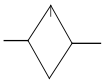

Model	Specification						Bracket
	Minimal Flow of Oil Drop (L/min)	Flow Rate* (L/min)	SCFM* Cubic Feet /min	Port Size	Bowl Capacity (cm^3)	Weight(Kg)	
AL1000-M5	4	95	3.4	M5	7	0.07	-
AL2000-01	15	800	28.3	1/8"	25	0.22	B240
AL2000-02				1/4"			
AL3000-02	30	1700	60	1/4"	50	0.30	B340
AL3000--03	40			3/8"			
AL4000-03	40	5000	177	3/8"	130	0.56	B440
AL4000-04	50			1/2"			
AL4000-06	50	6300	222	3/4"	130	0.58	B540
AL5000-06	190	7000	247	3/4"	130	1.08	B640
AL5000-10				1			

Overall Dimension Drawing

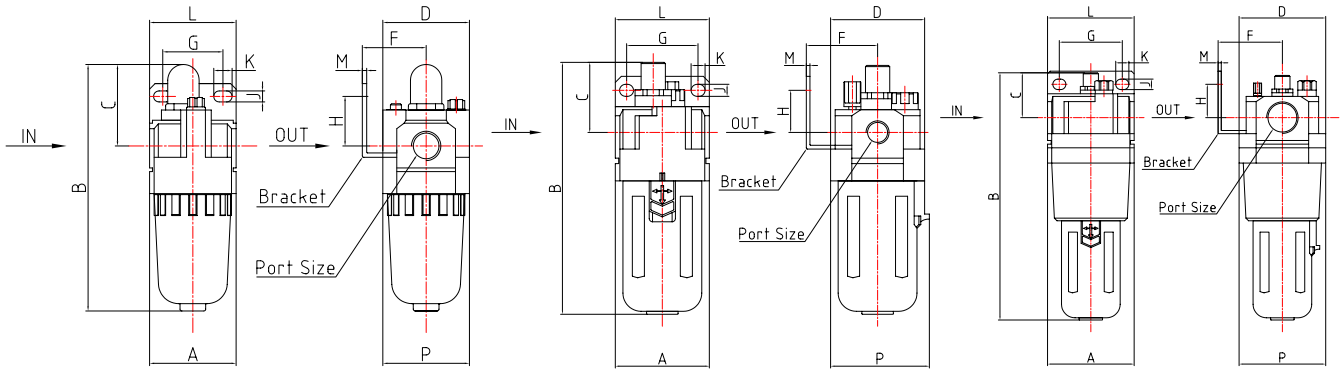

Dimension Sheet (mm)

Model	Port Size	A	B	C	D	F	G	H	J	K	L	M	N
AL1000	M5	25	81.5	25.5	25	-	-	-	-	-	-	-	27
AL2000	1/8", 1/4"	40	122	38	40	30	27	22	5.4	8.4	40	2.3	40
AL3000	1/4", 3/8"	53	142	38	53	41	40	23	6.5	8	53	2.3	56
AL4000	3/8", 1/2"	70	177	41	70	50	54	26	8.5	10.5	70	2.3	73
AL4000-06	3/4"	75	177	39	70	50	54	25	8.5	10.5	70	2.3	73
AL5000	3/4", 1"	90	254	45	90	66.5	66	35	11	13	90	3.2	

Modular FRL Unit

A Series

AW1000-5000 Series



Symbol

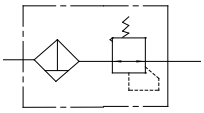

Specification

Model	Specification					Bracket	Drain Function	Auto Drain Model
	Flow Rate* (L/min)	SCFM* Cubic Feet / min	Port Size	Pressure Gauge size (G)	Weight (Kg)			
AW1000-M5	110	3.5	M5	1/16	0.09	B120	Manual Drain	-
AW2000-01	550	19.4	1/8"	1/8	0.36	B220		AW2000-01D
AW2000-02			1/4"					AW2000-02D
AW3000-02	2000	70.6	1/4"	1/8	0.56	B320	a.Air Shutoff Drain	AW3000-02D
AW3000--03			3/8"					AW3000--03D
AW4000-03	4000	141	3/8"	1/4	1.15	B420		AW4000-03D
AW4000-04			1/2"					AW4000-04D
AW4000-06	4500	159	3/4"	1/4	1.21			AW4000-06D
AW5000-06	5500	194	3/4"	1/4	1.70		b.Manual Drain	AW5000-06D
AW5000-10			1					AW5000-10D

Overall Dimension Drawing

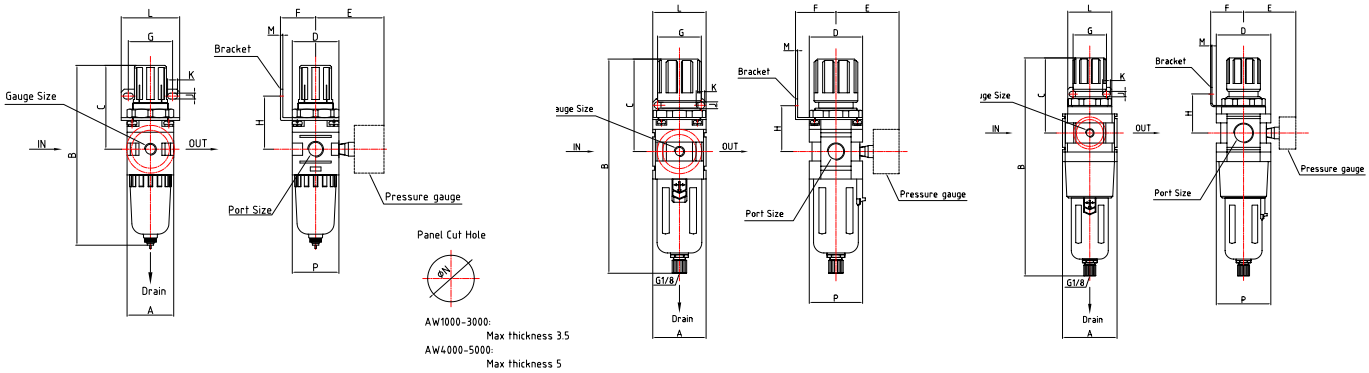

Dimension Sheet (mm)

Model	Port Size	A	B	C	D	E	F	G	H	J	K	L	P	M	N	*with auto drain B
AW1000	M5	25	113	50.5	25	26	25	28	30	4.5	6.5	40	28	2	20.5	-
AW2000	1/8", 1/4"	40	158	78	40	56.8	30	34	43.5	5.4	15.4	55	40	2.3	33.5	197
AW3000	1/4", 3/8"	53	208	92.5	53	60.8	39	40	46	6.5	8	53	56	2.3	42.5	223
AW4000	3/8", 1/2"	70	256	112	70	70.5	49.2	54	53.5	8.5	10.5	70	73	2.3	52.5	262
AW4000-06	3/4"	75	261	114	70	70.5	49.2	54	55.5	8.5	10.5	70	73	2.3	52.5	266
AW5000	3/4", 1"	90	338	116	90	70.5	49.2	54	62	8.5	10.5	70	90	2.3	52.5	343

ZDFS Auto Discharger



Range of Application

This product is installed at the bottom of water cup for auto dischargers, air filters and air filter regulators and can auto discharge the condense water gathered in the water cup.

Technical Requirement

Working medium: compressed air
Ambient and media temperature:5-60 celsius degree.
Operating Pressure: 0.15-1.00MPa

Feature

Auto draimer Manual Drain
Air Shutoff Drain
The water cup is provide with metal protective cover

Point for Attention

When using , the drainer should be installed vertically on the drain port facing down.

HAD402 Series



Symbol

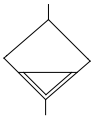

Purpose

This product often applies to auto remove the seeper at the lower places of piping, frozen type air drying machine, oil separtator, air storage tanks and the bottom of various air filters. It can be installed in the places inconvenient for manual discharge of sewage, such as higher, lower and narrow places, especially there is large consumption of air or frequent water drains. It can prevent the compressed air being re-polluted by condense water resulting from neglect of manual drain.

Features

Auto draimer Manual Drain
Air Shutoff Drain
The water cup is provide with metal protective cover

Point for Attention

When using , the drainer should be installed vertically the drain port facing down.

Model	HAD402-02	HAD402-03	HAD402-04
Ensured Pressure Resistance	1.5MPa		
Operating Pressure	0.15-1.00MPa		
Ambient and Fluid Temperature	5-60 Celsius Degree		
Port Size	G1/4"	G3/8"	G1/2"
Drain Port Size	R1/8		
Drain Status	Normal Open Type		
Working Medium	Compressed air		

20--Type Bracket

Used for AR, AW series



Model
B120
B220
B320
B420

40-Type Bracket

Used for AF, AL series



Model
B240
B340
B440
B540
B640

Pressure Gauge

PG-01



PG-02



T-Type Spacer

Used for AC series

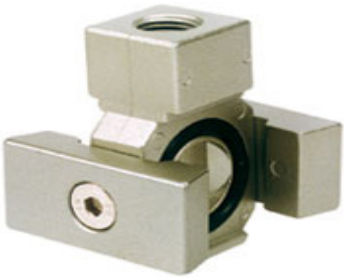

Model	Port Size G
Y21-01	G1/8"
Y21-02	G1/4"
Y31-01	G1/8"
Y31-02	G1/4"
Y41-02	G1/4"
Y41-03	G3/8"
Y61-03	G3/8"
Y61-04	G1/2"

L-Type Bracket

Used for AC series

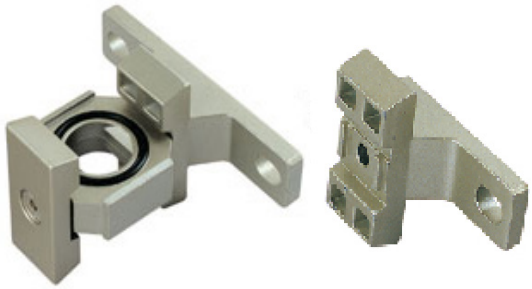

L-Type Bracket	Spacer with L-type bracket
B110L	Y10L
B210L	Y20L
B310L	Y30L
B410L	Y40L
B510L	Y50L
B610L	Y60L

Feature

Large flow, remove quickly compressed air's oil, water, solids and other pollutants, to move the function of the downstream dryer, extending the service life of precision filter.

HAF Series



Symbol

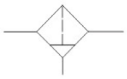

Model	HAF800-14	HAF900-20	HAF1200-30
Operating Fluid	Air		
Port Size	G1-1/2"	G2"	G3"
*Filter Precision	25u		
Ensured Pressure Resistance	1.5MPa		
Ambient Fluid Temperature	5-60℃		
Rating Flow	12000L/min	20000L/min	
Guard Cup	•	•	•

*5/50um availlable in addition

HAR Series



Symbol

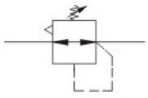

Model	HAR825-14	HAR925-20	HAR1225-30
Operating Fluid	Air		
Port Size	G1-1/2"	G2"	G3"
Ensured Pressure Resistance	1.5MPa		
Ambient Fluid Temperature	5-60℃		
Rating Flow	12000L/min	20000L/min	
Adjustable Pressure Range	0.05~0.85Mpa		
Guard Cup	•	•	•

HAL Series



Symbol



Model	HAL800-14	HAL900-20	HAL1200-30
Operating Fluid	Air		
Port Size	G1-1/2"	G2"	G3"
Ensured Pressure Resistance	1.5MPa		
Ambient Fluid Temperature	5-60℃		
Min. Flow of Oil Drop	650L/min	1800L/min	
Guard Cup	•	•	•

Modular FRL Unit

AFF Series Main Line Filter

How to Order

AFF	350	04	D
Series	Body Size 350: G1/2" 550: G1" 650: G1-1/2"	Port Size 04: G1/2" 10: G1" 14: G1-1/2"	Drain Type A: Auto drain



Symbol

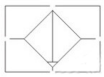

Model	AFF350-04	AFF550-10	AFF650-14
Operating Fluid	Filtered Compressed Air		
Port Size	G1/2"	G1"	G1-1/2"
*Filter Precision	3u(Removai 95%)		
Working Pressure	0.05Mpa~1.6Mpa		
Ambient Fluid Temperature	-5-60℃		
Flow Rate	1500L/min	3700L/min	6000L/min
Element Life	At Pressure Differential of 0.1Mpa		

*5/50um availlable in addition

Slow Start Valve

HAV2000-5000S Series

This is a differential balanced valve automatically opens the air port fully when the downstream pressure is about 50% of the upstream pressure. Without a pilot, the upstream air flows downstream through the regulation needle. When an external or pneumatic solenoid signal is generated, the valve opens the main ports to create full flow. It doesn't relieve the downstream circuit.



Symbol

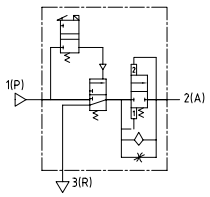

Specifications

Model		HAV2000	HAV3000	HAV4000	HAV5000	
Port Size		1/4	3/8	1/2	3/4	1
Effective sectional area	1(P)-2(A)	20	37	61	113	122
	2(A)-3(R)	24	49	76	132	141
Applicable Pressure Range		0.3~1.0MPa				
Ambientand Fluid Temperature		0~60℃				
Coil voltage Rating		DC24/12V, AC220/110V				
Allow voltage fluctuation		Rated voltage-15%~+10%				
Coil insulation class		B level or the same level				
Consumed power DC		3W				
Apparent power AC		Start: 5.6VA Keep: 3.4VA				
Port size of cap for pnuematic version		G1/8				
lowest start pressure for pneumatic version		0.2MPa				

Overall Dimension Drawing

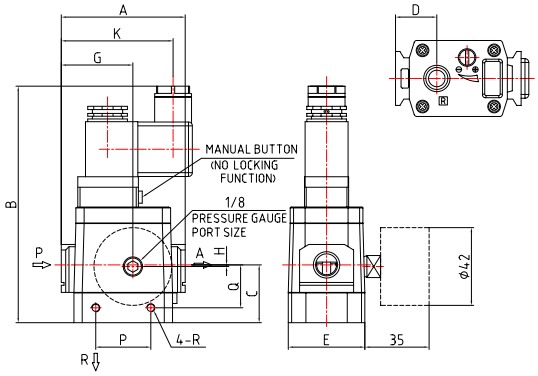

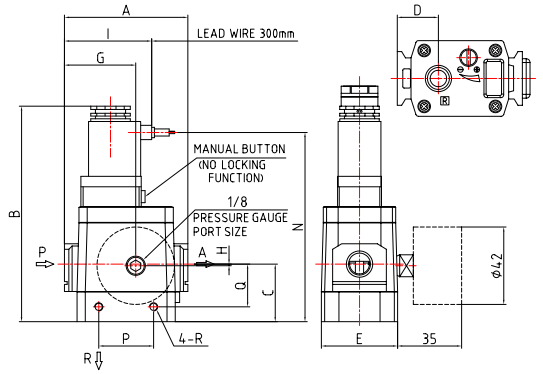

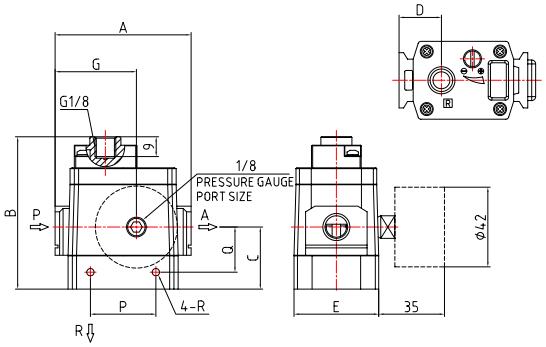

Dimension Sheet (mm)

Model	Entry cable	Port Size G	A	B	C	D	E	G	H	I	K	N	P	Q	R
HAV2000	G	1/4	66	114	31	22	40	38	0	47	-	100	29	23.5	M4 Deep5
	D			124						-	60	-			
HAVA2000	-			75						-	-	-			
HAV3000	G	3/8	76	121	36	24	48	43	2	50	-	107	28	27.5	M5 Deep5
	D			131						-	63	-			
HAVA3000	-			82						-	-	-			
HAV4000	G	1/2	98	136	47	32	52	57	3	62	-	122	42	37	M6 Deep6
	D			146						-	75	-			
HAVA4000	-			97						-	-	-			
HAV5000	G	3/4 1	128	164	59	39	74	77	0	74	-	150	50	46	M6 Deep7.5
	D			174						-	85	-			
HAVA5000	-			139						-	-	-			

Modular FRL Unit

HVHS Venting Safety Lock-out Valve

Feature

It is easy to be maintained because it can realse the pressure of the hypo-pressure side when it is working.
It can ensure the safety of the maintenance man because of the lockup function.



Symbol

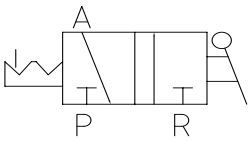

Overall Dimension

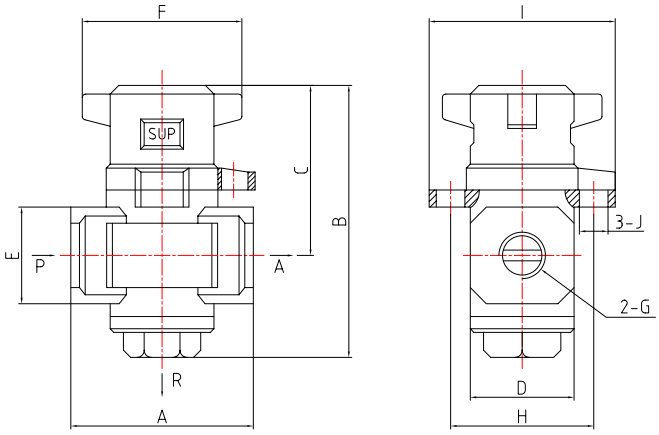

Model	Port Size	Vent Size
HVHS2000-01-X1	G1/8"	G1/8"
HVHS2000-02-X1	G1/4"	G1/8"
HVHS3000-02-X1	G1/4"	G1/4"
HVHS3000-03-X1	G3/8"	G1/4"
HVHS4000-03-X1	G3/8"	G3/8"
HVHS4000-04-X1	G1/2"	G3/8"
HVHS5000-10-X1	G1"	G3/8"

Dimension Sheet (mm)

Model	G	Vent size	A	B	C	D	E	F	H	I	J
HVHS2000-01-X1	G1/8	G1/8	40	59	39	28	22	40	32	41	ϕ6
HVHS2000-02-X1	G1/4	G1/8	40	59	39	28	22	40	32	41	ϕ6
HVHS3000-02-X1	G1/4	G1/4	53	78	49	30	28	45	41.5	53	ϕ7.5
HVHS3000-03-X1	G3/8	G1/4	53	78	49	30	28	45	41.5	53	ϕ7.5
HVHS4000-03-X1	G3/8	G3/8	70	84	52	36	36	45	41.5	53	ϕ7.5
HVHS4000-04-X1	G1/2	G3/8	70	84	52	36	36	45	41.5	53	ϕ7.5
HVHS5000-06-X1	G3/4	G1/2	90	136	72	54	48	68	77	90	ϕ8.5
HVHS5000-10-X1	G1	G1/2	90	136	72	54	48	68	77	90	ϕ8.5

Feature

Used for air tools

High stability with low load losses and big flow.

Compact volume



Symbol

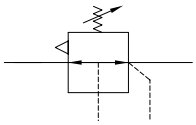

Specifications

Model	NAR200
Working Medium	Compressed air
Maximum Working Pressure	1.6MPa(10Kgf/cm^2)
Pressure Regulating Range	0.05~0.85 MPa(0.5~8.5Kgf/cm^2)
Ambient and Fluid Temperature	5-60℃
Valve Type	With Overflow

Model	Specifications					
	Rated Flow (L/min)	Port size(G)	Pressure Gauge Size	With overflow	Weight (kg)	Pressure Gauge
NAR200-01	300	1/8	1/8	No	0.16	G27-10-R1
NAR200-02		1/4				

Overall Dimension

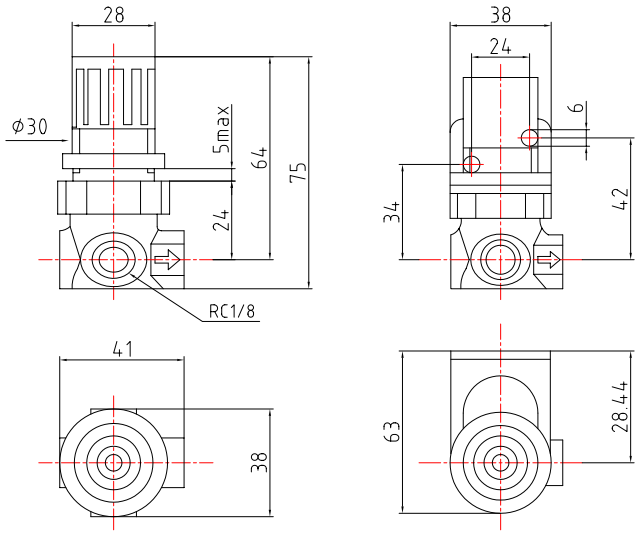

Modular FRL Unit

A/B Series

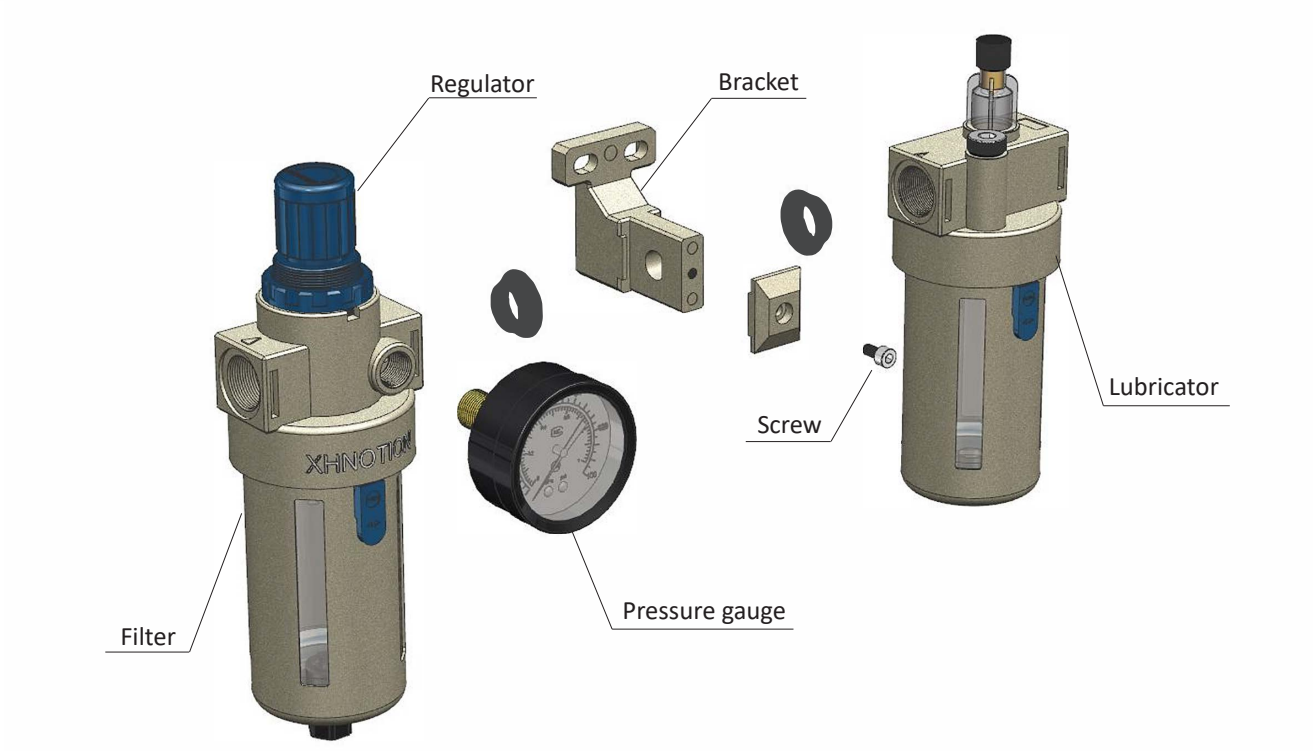

Features

1. Various combinations available
2. Port sizes: M5 to 1"
3. Modular design allows for space saving and easy installation
4. Compatible with pressure switches, soft start valve and safety pressure relief valve.

Symbol

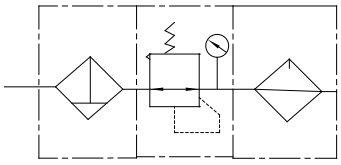

How to Order

A	C	2000	M	L
Model	Type	Port Size	Drain Type	Pressure Regulating Range
A Series B Series	C: Three combination FC: Two combination FR: Filter&Regulator R: Air regulator L: Air Lubricator F: Air filter	1500: PT1/8" 2000: PT1/4" 2000: PT1/4" 3000: PT3/8" 4000: PT1/2"	M: Manual Drain A: Automatic Blank: Pressure Differential Drain	Blank: Standard(0.85MPa) L: Low Presuure(04MPa)

AC、BC Series

Model		AC1500	AC2000	BC2000	BC3000	BC4000
Operating Fluid		Air				
Port Size		G1/8"	G1/4"	G1/4"	G3/8"	G1/2"
*Filter Precision		40u				
Pressure Regulating Range		0.05-0.85MPa(7-12psi)				
Ensured Pressure Resistance		1.5MPa(213psi)				
Operating Temperature		5-60℃				
Recommended Oil Use		ISO VG 32 or Same Grade Oil				
Weight		700g		900g		
Composed Elements	Filter	AF1500	AF2000	BF2000	BF3000	BF4000
	Regulator	AR1500	AR2000	BR2000	BR3000	BR4000
	Lubricator	AL1500	AL2000	BL2000	BL3000	BL4000
Guard Cup		•	•	-	-	-

*5/50um availlable in addition

Symbol

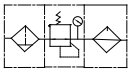

Overall Dimension



AC Series

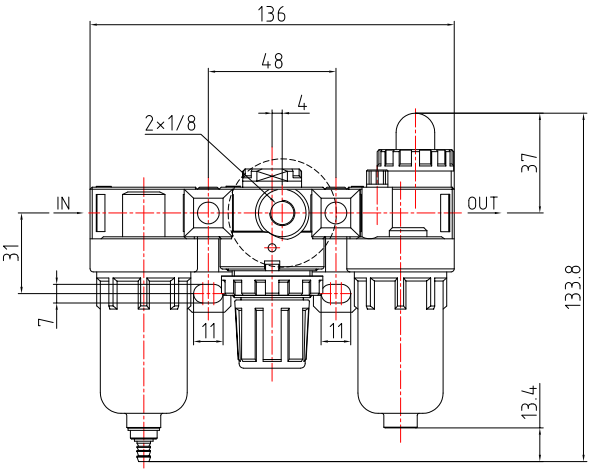

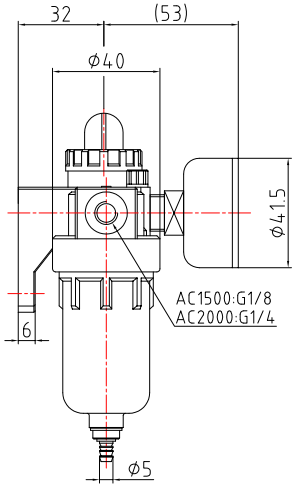



BC Series

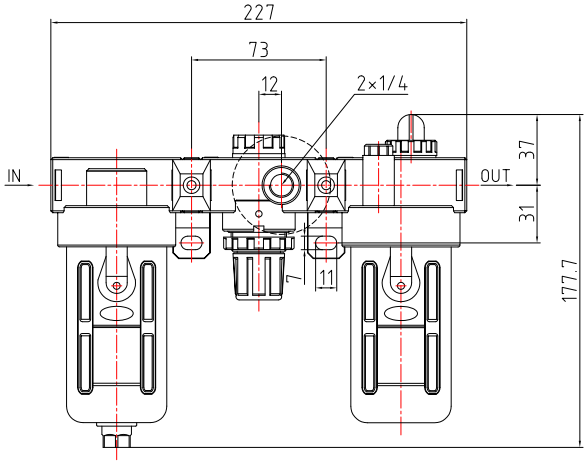

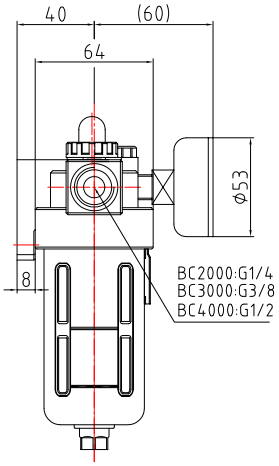

Modular FRL Unit

A/B Series

AFC、BFC Series

Model		AFC1500	AFC2000	BFC2000	BFC3000	BFC4000
Operating Fluid		Air				
Port Size		G1/8"	G1/4"	G1/4"	G3/8"	G1/2"
*Filter Precision		40u				
Pressure Regulating Range		0.05-0.85MPa(7-12psi)				
Ensured Pressure Resistance		1.5MPa(213psi)				
Operating Temperature		5-60℃				
Recommended Oil Use		ISO VG 32 or Same Grade Oil				
Weight		500g		700g		
Composed Elements	Filter	AFR1500	AFR2000	BFR2000	BFR3000	BFR4000
	Regulator	AL1500	AL2000	BL2000	BL3000	BL4000
Guard Cup		•	•	-	-	-

*5/50um availlable in addition

Symbol

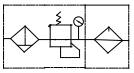

Overall Dimension Drawing



AFC Series

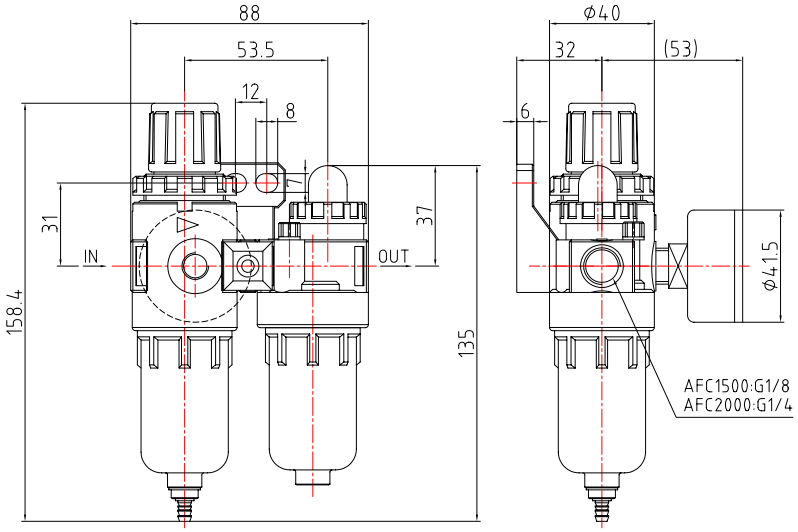



BFC Series

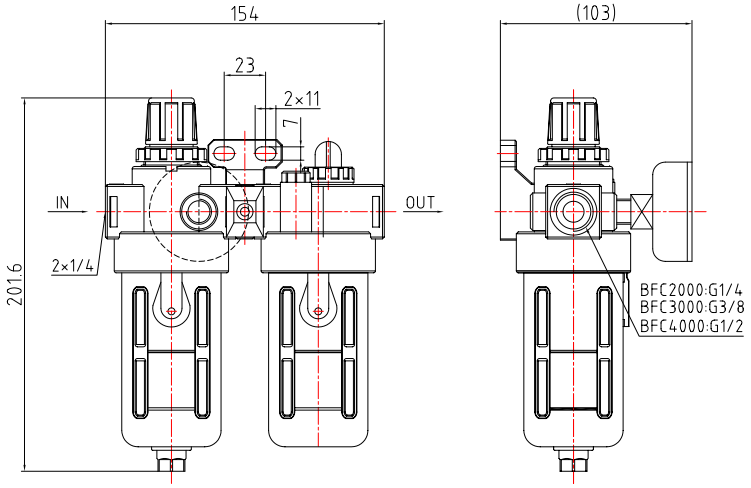

AR、BR Series

Symbol



Model	AR1500	AR2000	BR2000	BR3000	BR4000
Operating Fluid	Air				
Port Size	G1/8"	G1/4"	G1/4"	G3/8"	G1/2"
Pressure Regulating Range	0.05-0.85MPa(7-12psi)				
Ensured Pressure Resistance	1.5MPa(213psi)				
Operating Temperature	5-60℃				
Weight	200g		230g		

Overall Dimension Drawing



AR Series

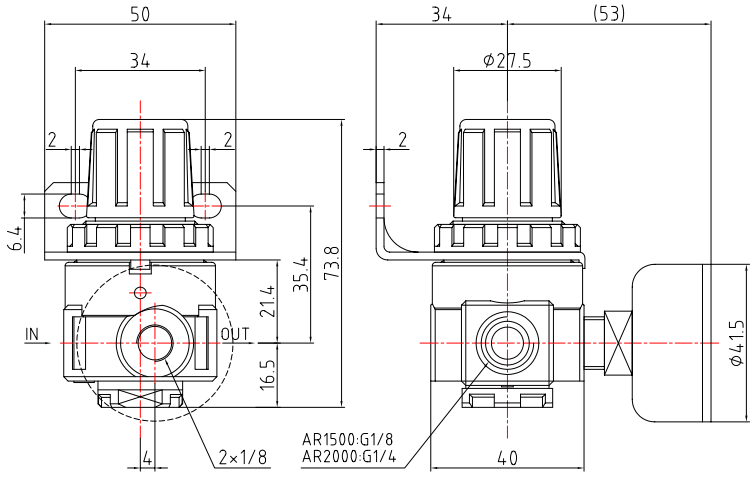



BR Series

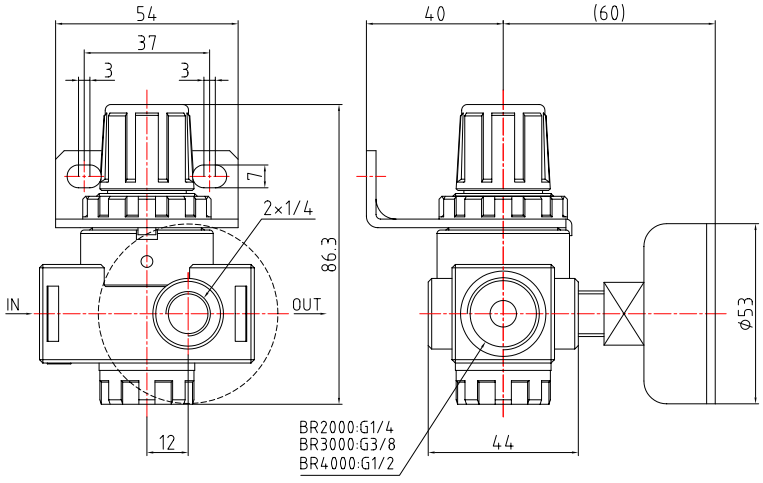

AL、BL Series

Model	AL1500	AL2000	BL2000	BL3000	BL4000
Operating Fluid	Air				
Port Size	G1/8"	G1/4"	G1/4"	G3/8"	G1/2"
Ensured Pressure Resistance	1.5MPa(213Psi)				
Operating Temperature	5-60℃				
Recommended Oil Use	ISO VG 32 or Same Grade Oil				
Weight	170g		250g		
Guard Cup	•	•	-	-	-

Symbol

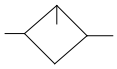

Overall Dimension Drawing



AL Series

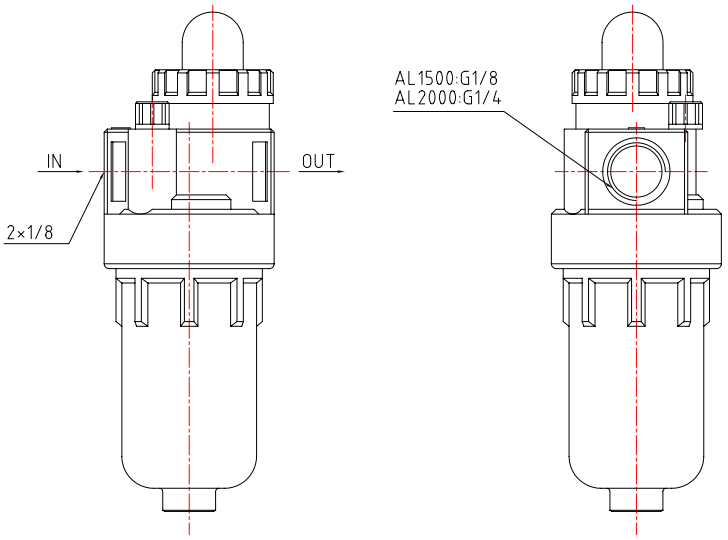



BL Series

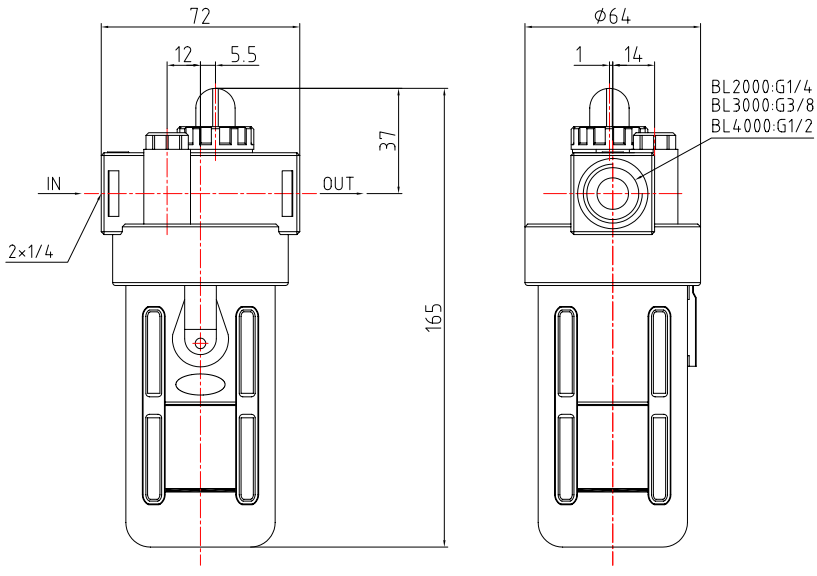

AFR、BFR Series

Symbol



Model	AFR1500	AFR2000	BFR2000	BFR3000	BFR4000
Operating Fluid	Air				
Port Size	G1/8"	G1/4"	G1/4"	G3/8"	G1/2"
*Filter Precision	40u				
Pressure Regulating Range	0.05-0.85MPa(7-12psi)				
Ensured Pressure Resistance	1.5MPa(213psi)				
Operating Temperature	5-60℃				
Weight	260g		400g		
Guard Cup	•	•	-	-	-

*5/50um availlable in addition

Overall Dimension Drawing



AFR Series

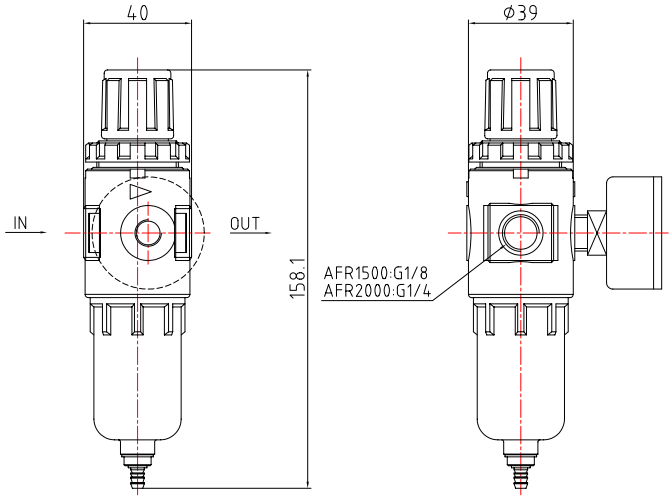



BFR Series

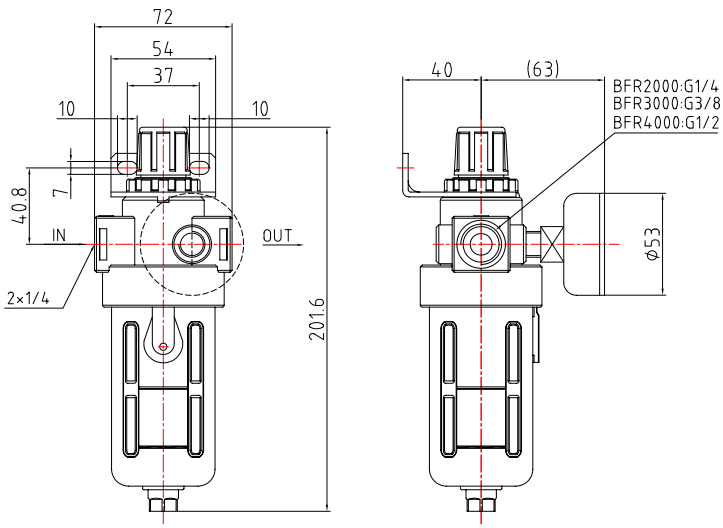

AF、BF Series

Model	AF1500	AF2000	BF2000	BF3000	BF4000
Operating Fluid	Air				
Port Size	G1/8"	G1/4"	G1/4"	G3/8"	G1/2"
*Filter Precision	40u				
Ensured Pressure Resistance	1.5MPa(213Psi)				
Operating Temperature	5-60℃				
Weight	140g		330g		
Guard Cup	•	•	-	-	-

*5/50um availlable in addition

Symbol



Overall Dimension Drawing



AF Series

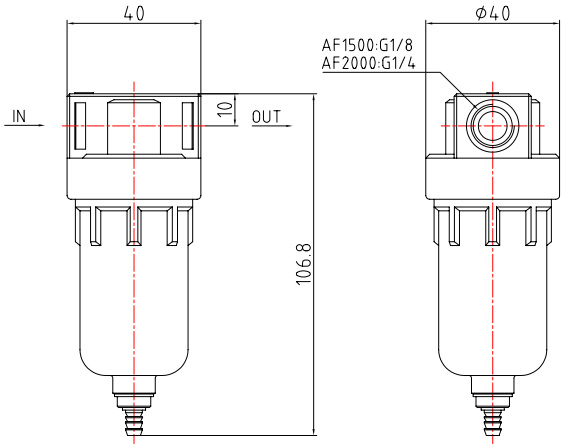



BF Series

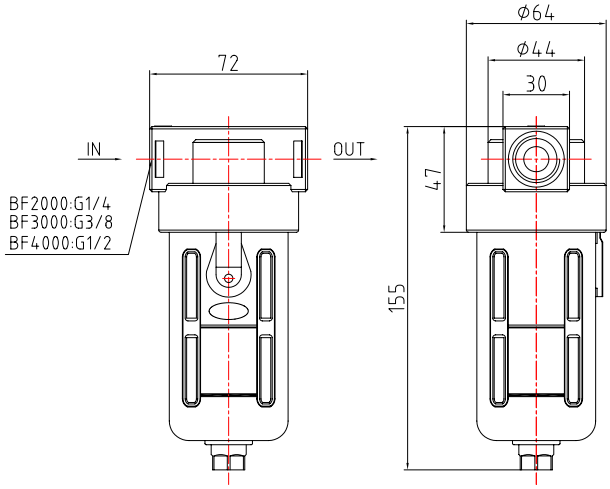

Features

1. 39 series is equivalent to Herion Air Preparation.

2. Port sizes: M5 to 1"

3. Modular design allows for space saving and easy installation

4. Compatible with pressure switches, soft start valve and safety pressure relief valve.

Model	39 Series
Working Medium	Filtered and Compressed Air
Pressure Regulating Range	0.05~0.85 Mpa
Ambient Temperature	5-60 ℃
Filter	5um, 40um

398 1000-5000 Series



399 1010-5010 Series



396 1000-5000 Series



395 1000-5000 Series



394 1000-5000 Series



397 1000-5000 Series



Modular FRL Unit
GAR Series Regulator

How to Order

GAR	4000	04
Series 1.7Mpa Pressure Reducing Valve	Specification 2000 2500 3000 4000 5000	Port Size G 1/8" G 1/4" G 3/8" G 1/2" G 3/4" G 1

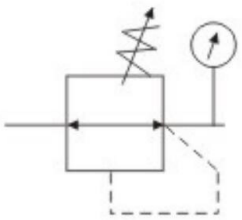

Symbol



Specification	
Ensured Pressure Resistance	2.0MPa
Hightest Working Pressure	1.7MPa
Pressure Regulating Range	0.05~1.7MPa
Ambient and Fluid Temperature	5-60℃
Valve Type	Piston Type

Pressure Regulating Range:0.02-0.2MPa(0.2-2kgf/cm^2)

Model	Specifications				Accessories
	Rated Flow (L/min)	Port size (G)	Pressure Gauge Size	Weight (kg)	Pressure Gauge
GAR2000-01	500	1/8	1/8	0.3	G36-20-01
GAR2000-02		1/4			
GAR2500-02	2000	1/4		0.4	
GAR2500-03		3/8			
GAR3000-02	2500	1/4		0.5	
GAR3000-03		3/8			
GAR4000-03	6000	3/8	1/4	1.2	G46-20-02
GAR4000-04		1/2			
GAR4000-06		3/4		1.25	
GAR5000-06	8000	3/4		1.8	
GAR5000-10		1			

Rc and NPT port size are available.

Structral Diagram

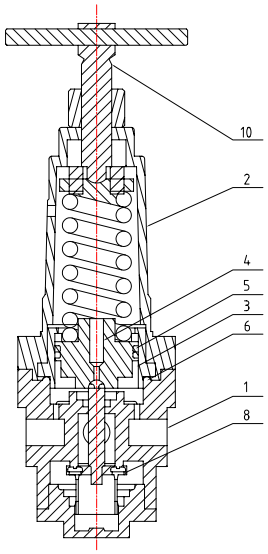

List of Components		
NO.	Denomination	Material
1	Valve Body	Aluminum Die Casting
2	Valbe Cover	Aluminum Die Casting
3	Piston Ring	Aluminum
4	Piston	Aluminum
5	Y-ring	Rubber
6	Adjustment Screw	Stainless Steel
7	O-ring	Rubber
8	O-ring	Rubber
9	Valve Core	Brass, Rubber
10	Spring	Stainless Steel
11	O-ring	Rubber
12	O-ring	Rubber

Overall Dimension Drawing (mm)

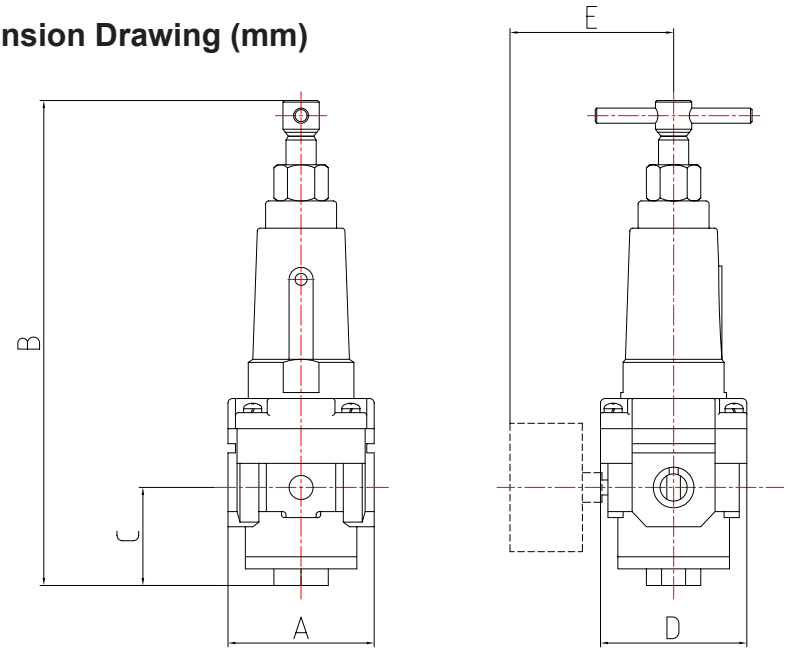

Dimension Sheet						
Model	Port Size (G)	A	B	C	D	E
GAR2000	1/8-1/4	40	118.5	18.5	40	50
GAR2500	1/4-3/8	53	125.5	25	48	54
GAR3000	1/4-3/8	53	175	35	53	54
GAR4000	3/8-1/2	70	198	37	70	58
GAR4000-06	3/4	75	202.5	39.5	70	61
GAR5000	3/4-1	90	218	49.5	90	68

Modular FRL Unit
GNAC Series Air Filter Combination

How to Order

GNAC	4000	04M
Series 1.7Mpa F.R.L Combination	Specification 2000 2500 3000 4000 5000	Port Size G 1/8" G 1/4" G 3/8" G 1/2" G 3/4" G 1

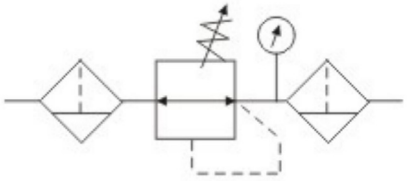

Symbol



Features: Compared normal PC materials, this series products adopt aluminum alloy water bowl and oil bowl.

Environmental Conditions: sunshine environmental, organic solvent, diluent, tetrachloro, carbon, chloroform, nitric acid, vitriol, anilin, kerosene etc.

Specification	
Ensured Pressure Resistance	2.0MPa(20kgf/cm^2)
Highest Working Pressure	1.7MPa(17kgf/cm^2)
Ambient and Fluid Temperarure	5~60℃
Filter Precision	25 μm
Recommended Oil Use	Turbine No.1 Oil ISOVG32
Container Material	Aluminum Die Casting
Pressure Regulating Range	0.05~1.7MPa(0.5~17kgf/cm^2)
Valve Type	Piston Type

5μm, 50μm Available in Addition

Model	Specifications							Accessories	
	Assembly			Rated Flow (L/min)	Port Size (G)	Pressure Gauge Size (G)	Weight (kg)	Bracket (2pcs)	Pressure Gauge
	Filter	Regulator	Mist Sepatator						
GNAC2000-01M	ENAF2000M	GAR2000	ENAL2000M	500	1/8	1/8	0.74	Y20L	G36-20-01
GNAC2000-02M					1/4				
GNAC2500-02M	ENAF3000M	GAR2500	ENAL3000M	1500	1/4	1/8	1.04	Y30L	
GNAC2500-03M					3/8				
GNAC3000-02M	ENAF3000M	GAR3000	ENAL3000M	2000	1/4	1/8	1.18	Y30L	
GNAC3000-03M					3/8				
GNAC4000-03M	ENAF4000M	GAR4000	ENAL4000M	4000	3/8	1/4	2.14	Y40L	G46-20-02
GNAC4000-04M					1/2				
GNAC4000-06M	ENAF4000-06M	GAR4000-06	ENAL4000-06M	4500	3/4	1/4	2.47	Y50L	
GNAC5000-06M	ENAF5000M	GAR5000	ENAL5000M	5000	3/4	1/4	3.82	Y60L	
GNAC5000-10M					1				

Rc and NPT Port Size are Available

Overall Dimension Drawing (mm)

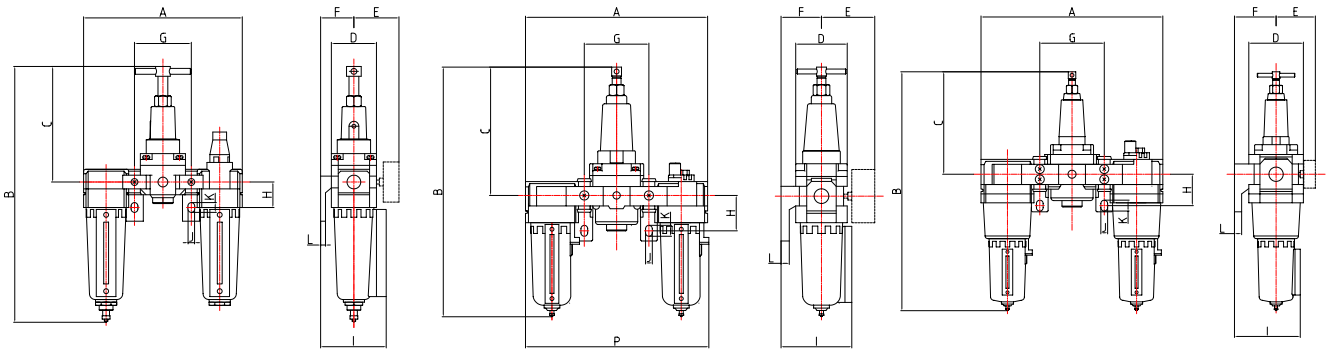

GNAC2000-2500 GNAC3000-4000 GNAC5000

Dimension Sheet														
Model	Port Size (G)	A	B	C	D	E	F	G	H	I	J	K	L	P
GNAC2000	1/8-1/4	140	223.5	100	40	50	30	60	24	58	5.5	8.5	5	-
GNAC2500	1/8-1/4	181	267.5	100.5	53	54	41	64	35	72.5	7	11	7	184
GNAC3000	1/4-3/8	181	268	140	53	54	41	64	35	72.5	7	11	7	184
GNAC4000	3/8-1/2	238	316	161	70	58	50	84	40	90	9	13	7	241
GNAC4000-06	3/4	253	320	163.5	70	61	50	89	40	90	9	13	7	253.5
GNAC5000	3/4-1	300	397	169	90	68	69.8	105	50	109.8	12	16	10.5	-

Modular FRL Unit
GNAC Series Air Filter Combination

How to Order

GNAC	4010	04M
Series 1.7Mpa FR.L/F.R.L Combination	Specification 2010 3010 4010 5010	Port Size G 1/8" G 1/4" G 3/8" G 1/2" G 3/4" G 1

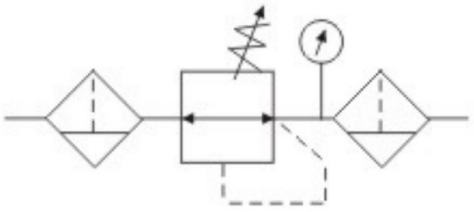

Symbol

Features: Compared normal PC materials, this series products adopt aluminum alloy water bowl and oil bowl.

Environmental Conditions: sunshine environmental, organic solvent, diluent, tetrachloro, carbon, chloroform, nitric acid, vitriol, anilin, kerosene etc.



Specification	
Ensured Pressure Resistance	2.0MPa(20kgf/cm^2)
Highest Working Pressure	1.7MPa(17kgf/cm^2)
Ambient and Fluid Temperarure	5~60℃
Filter Precision	25 μm
Recommended Oil Use	Turbine No.1 Oil ISOVG32
Container Material	Aluminum Die Casting
Pressure Regulating Range	0.05~1.7MPa(0.5~17kgf/cm^2)
Valve Type	Piston Type

5μm, 50μm Available in Addition

Model	Specifications						Accessories	
	Assembly		Rated Flow (L/min)	Port Size (G)	Pressure Gauge Size (G)	Weight (kg)	Bracket (2pcs)	Pressure Gauge
	Filter With Pressure Reduver	Mist Sepatator						
GNAC2010-01M	GNAW2000M	ENAL2000M	500	1/8	1/8	0.66	Y20T	G36-20-01
GNAC2010-02M				1/4				
GNAC3010-02M	GNAW3000M	ENAL3000M	1700	1/4	1/8	0.98	Y30T	
GNAC3010-03M				3/8				
GNAC4010-03M	GNAW4000M	ENAL4000M	3000	3/8	1/4	1.93	Y40T	G46-20-02
GNAC4010-04M				1/2				
GNAC4010-06M	GNAW4000-06M	ENAL4000-06M	3000	3/4	1/4	1.99	Y50T	
GNAC5010-06M	GNAW5000M	ENAL5000M	4000	3/4	1/4	3.20	Y60T	
GNAC5010-10M				1				

Rc and NPT Port Size are Available

Overall Dimension Drawing (mm)

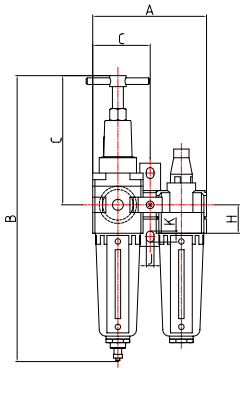

GNAC2010

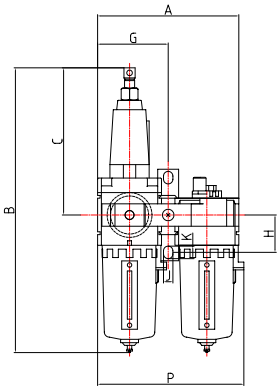

GNAC3010-4010

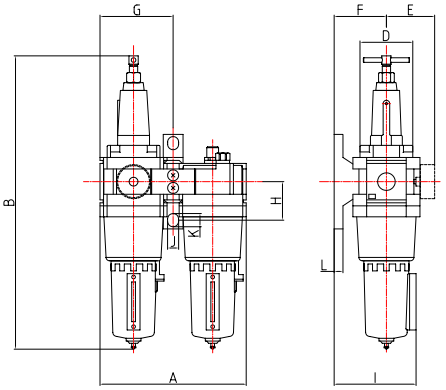

GNAC5010

Dimension Sheet														
Model	Port Size (G)	A	B	C	D	E	F	G	H	I	J	K	L	P
GNAC2010	1/8-1/4	90	223.5	100	40	50	30	45	24	58	5.5	8.5	5	-
GNAC3010	1/4-3/8	117	268	140	53	54	41	58.5	35	72.5	7	11	7	120
GNAC4010	3/8-1/2	154	316	161	70	58	50	77	40	90	9	13	7	157
GNAC4010-06	3/4	164	320	163.5	70	61	50	82	40	90	9	13	7	164.5
GNAC5010	3/4-1	195	397	169	90	68	69.8	97.5	50	109.8	12	16	10.5	-

Modular FRL Unit
GNAW Series Filter & Regulator

How to Order

GNAW	4000	04M
Series 1.7Mpa Pressure Reducing Valve	Specification 2000 3000 4000 5000	Port Size G 1/8" G 1/4" G 3/8" G 1/2" G 3/4" G 1

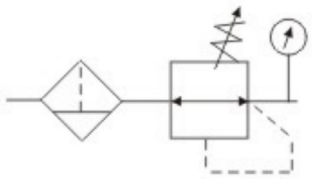

Symbol



Features: Compared normal PC materials, this series products adopt aluminum alloy water bowl and oil bowl.

Environmental Conditions: sunshine environmental, organic solvent, diluent, tetrachloro, carbon, chloroform, nitric acid, vitriol, anilin, kerosene etc.

Specification	
Ensured Pressure Resistance	2.0MPa
Highest Working Pressure	1.7MPa
Ambient and Fluid Temperarure	5~60℃
Filter Precision	25 μm
Container Material	Aluminum Die Casting
Pressure Regulating Range	0.05~1.7MPa(0.5~17kgf/cm^2)
Valve Type	Piston Type

5μm, 50μm Available in Addition

Model	Specification				Accessories	Drain Function
	Rated Flow (L/min)	Port Size (G)	Pressure Gauge Size (G)	Weight (kg)	Pressure Gauge	
GNAW2000-01M	550	1/8	1/8	0.36	G36-20-01	Air Shut-off Drian Manual Drian
GNAW2000-02M		1/4				
GNAW3000-02M	2000	1/4	1/8	0.56		
GNAW3000-03M		3/8				
GNAW4000-03M	4000	3/8	1/4	1.15	G46-20-02	
GNAW4000-04M		1/2				
GNAW4000-06M	4500	3/4	1/4	1.21		
GNAW5000-06M	5500	3/4	1/4	1.7		
GNAW5000-10M		1				

Rc and NPT Port Size are Available

Structral Diagram

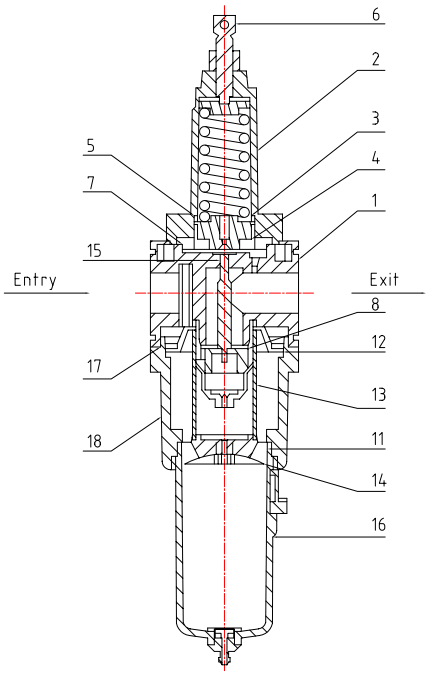

List of Components		
NO.	Denomination	Material
1	Valve Body	Aluminum Die Casting
2	Valve Cover	Aluminum Die Casting
3	Piston Ring	Aluminum
4	Piston	Aluminum
5	Y-ring	Rubber
6	Adjustment Screw	Stainless Steel
7	O-ring	Rubber
8	Valve Core	Brass, Rubber
9	Spring	Stainless steel
10	O-ring	Rubber
11	O-ring	Rubber
12	Whirlwind Blade	ABS
13	Filter Element	Brass
14	Drain Board	ABS,Brass
15	O-ring	Rubber
16	Metal Cup	Aluminum Die Casting
17	O-ring	Rubber
18	Middle Part	Aluminum Die Casting

Overall Dimension Drawing (mm)

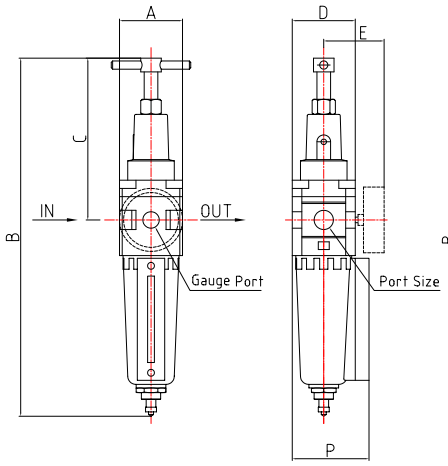

GNAW2000

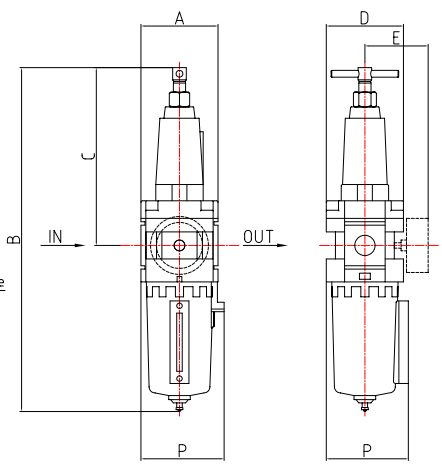

GNAW3000-4000

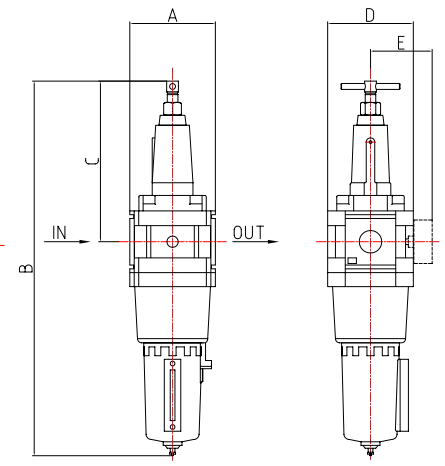

GNAW5000

Dimension Sheet								
Model	Port Size (G)	A	B	C	D	E	F	G
GNAW2000	1/8-1/4	40	223.5	100	40	50	48	-
GNAW3000	1/4-3/8	53	268	140	53	54	58	56
GNAW4000	3/8-1/2	70	316	161	70	58	75	73
GNAW4000-06	3/4	75	320	163.5	70	61	75	75.5
GNAW5000	3/4-1	90	397	169	90	68	-	-

Modular FRL Unit
M Series

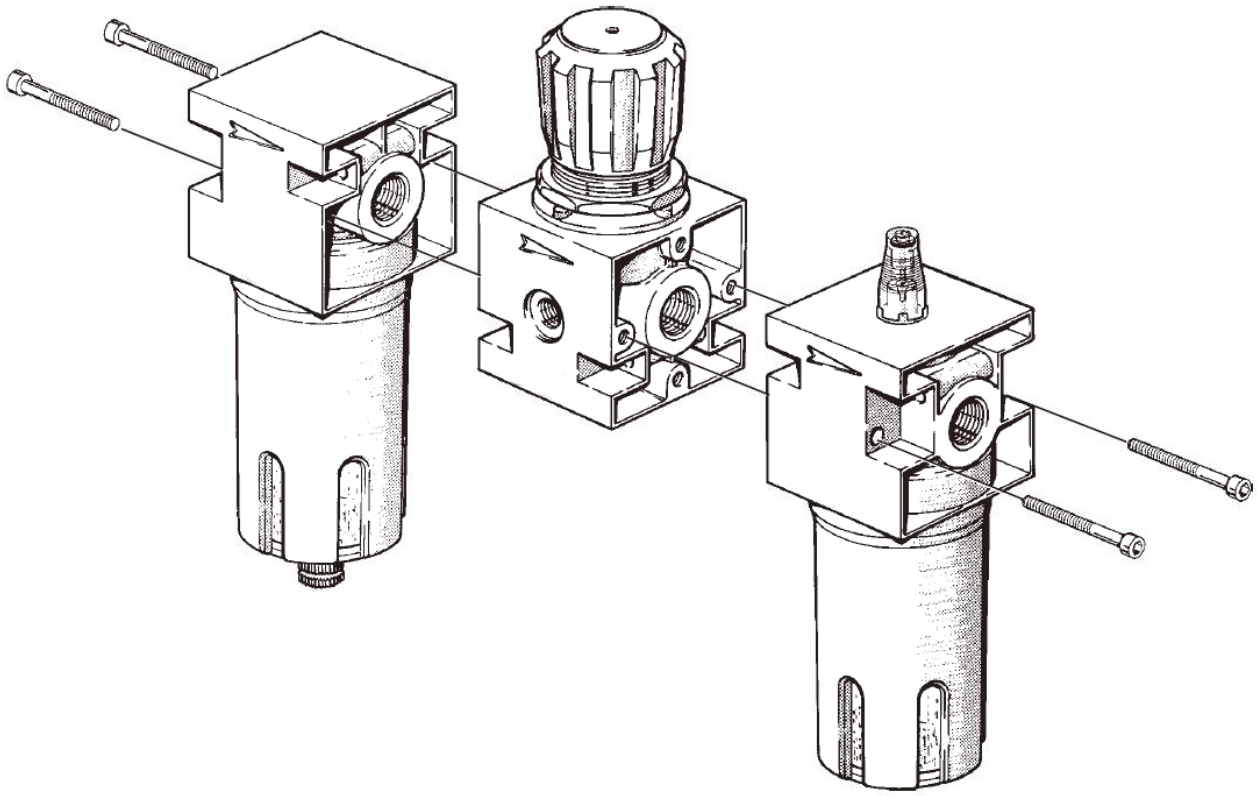

How to Order

MC 200-G02

- G02: G 1/4" N02: NPT 1/4"
  G03: G 3/8" N02: NPT 3/8"
  G04: G 1/2" N02: NPT 1/2"
  G06: G 3/4" N02: NPT 3/4"
  G08: G 1" N02: NPT 1" — Port size
- 200
  400
  600 — Body Size
- C: Three Combination or Two Combination
  FR: Filter&Regulator
  R: Air Regulator
  L: Air Lubricator
  F: Air Filter — Type
- M type — Series

Features

The entire range is top quality, heavy-duty and reliable. These units are designed for use at high pressures and in applications where the temperature and quality of the ambient area are critical.

Filter with different impurity filtrarion degrees.
1.Metal bowl with external drainage.
2.Semi-automatic and condensate drainage.

Symbol

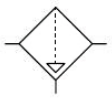

Type	MF200-02	MF400-03,04	MF600-06,08
Port Size	1/4"	3/8" 1/2"	3/4" 1"
Fluid	Compressed Air		
Max. inlet pressure MPa	1.6		
bar	16		
psi	261		
Flow Rate at 6 bar (L/min)	1300	3100	9100
Max Temperture at 1 Mpa (℃)	50℃		
Mounting Position	Vertical		
Drain	Manual-Semi-auto-Automatic		
Guard Cup	•	•	•



DIMENSIONS	1/4" (mm)	3/8" (mm)	1/2" (mm)	3/4" (mm)	1" (mm)
A	42	60		80	
B	142	180		235	
C	42	60		80	
D	42	60		80	
E	32	46		66	
G	10	14		22	
H	21	30		40	
L	4.3	4.3		7.4	
M	185	230		325	

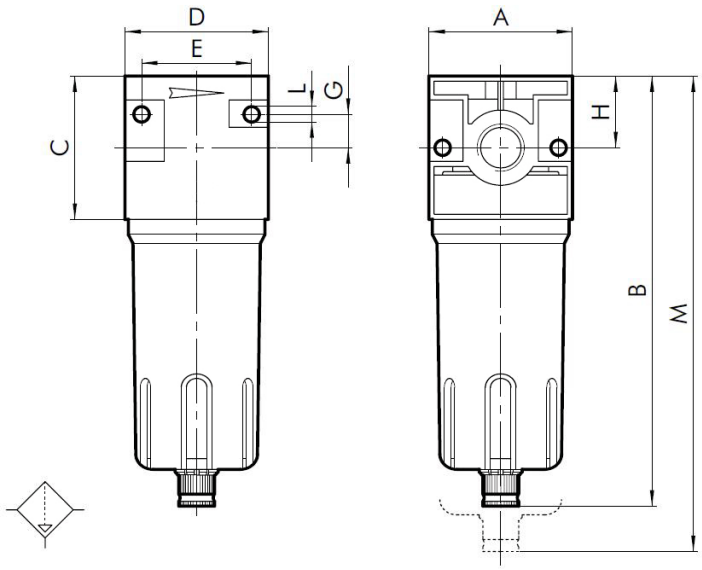

Modular FRL Unit
M Series Regulator

Highly reliable, heavy-duty piston-operated regulator.
1.Stability of the set pressure as the upstream pressure varies
2.Standard overpressure blowoff valve.
3.Can be fixed to the wall using the holes is the sides of the body.

Notes:
The regulator pressure must always be set upwards. For increased sensitivity, use a pressure regulator with a rated pressure
as close as possible to the required value. Do not take off air from gauge ports.

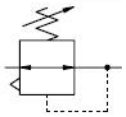

Symbol



Type	MR200-02	MR400-03,04	MR600-06,08
Port Size	1/4"	3/8" 1/2"	3/4" 1"
Fluid	Filtered, lubricated or unlubricated compressed air.Lubrication, if used, must be continuous		
Max. inlet pressure MPa	1.6		
bar	16		
psi	261		
Flow Rate at 6 bar (L/min)	200	1100	2500
Max Temperture at 1 Mpa (℃)	50℃		
Mounting Position	In any position		
Gauge port	1/8"	1/8"	1/4"

DIMENSIONS

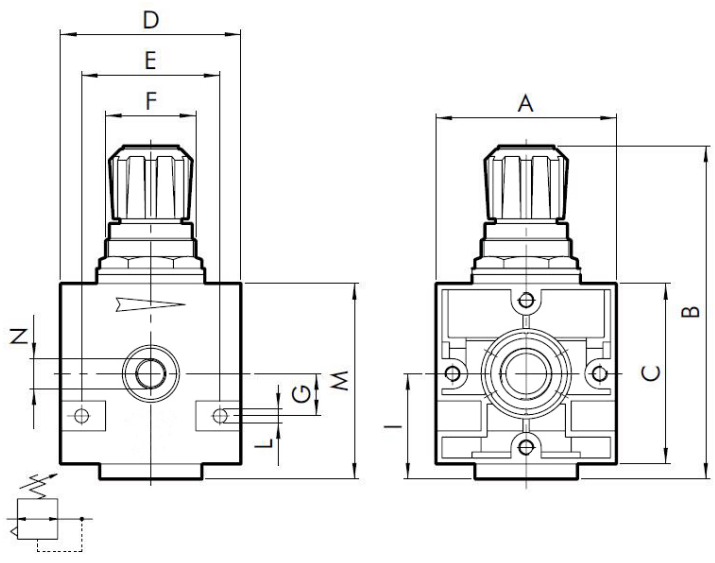

	1/4" (mm)	3/8" (mm)	1/2" (mm)	3/4" (mm)	1" (mm)
A	42	60		80	
B	94	130		184	
C	42	60		80	
D	42	60		80	
E	32	46		66	
G	30*1.5	38*2		55*2	
H	10	14		22	
I	25	35		47	
L	4.3	4.3		7.4	
M	49	70		94	
N	3.2	3.2		6.4	

Modular FRL Unit
M Series Filter & Regulator

Highly reliable, piston-operated filter regulator.
1.Stability of the set pressure as the upstream pressure varies
2.Standard overpressure relief valve.
3.Can be fixed to the wall using the holes is the sides of the body.
4.Metal bowl with external viewing.
5.Manual/semi-auto or automatic condensate drainage

Notes:
The regulator pressure must always be set upwards.

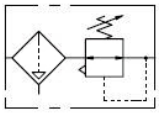

Symbol



Type	MFR200-02	MFR400-03,04
Port Size	1/4"	3/8" 1/2"
Fluid	Compressed air	
Max. inlet pressure MPa	1.6	
bar	16	
psi	261	
Flow Rate at 6 bar (L/min)	260	1000
Max Temperture at 1 Mpa (℃)	50℃	
Mounting Position	Vertical	
Gauge port	1/8"	1/8"
Condensate Drian	Manual-Semi-automatic-Automatic	

DIMENSIONS

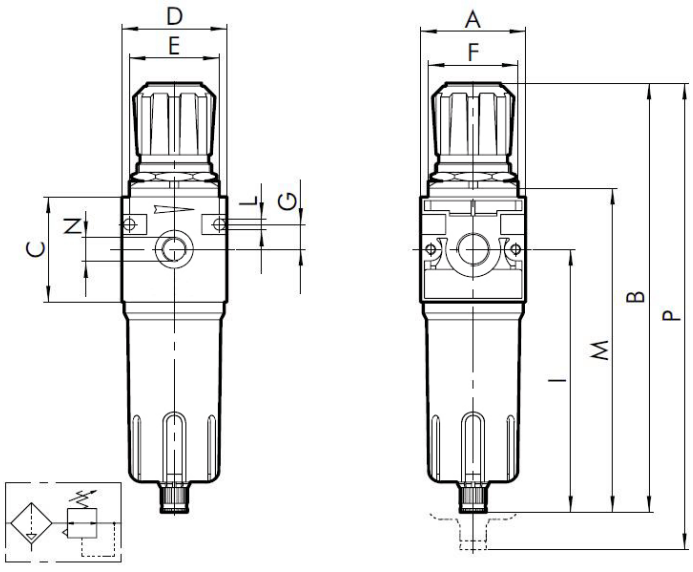

	1/4" (mm)	3/8" (mm)	1/2" (mm)
A	42	60	
B	190	245	
C	42	60	
D	42	60	
E	36	52	
G	30*1.5	38*2	
H	10	14	
I	121	150	
L	4.3	4.3	
M	145	185	
N	1/8"	1/8"	
P	233	295	

Modular FRL Unit
M Series Lubricator

Lubricator with high lubrication stability.
1.Quantity of lubricant proportioned to air flow
2.Micrometric regulation of lubricant flow
3.Activates at low flow rates
4.All-round oil level viewing

Notes:
1. Fit the lubricator as close as possible to the point of use
2.Fill the bowl with oil before pressurizing the system
3.Do not use cleaning oil, brake fluid or solvents in general
4.Automatic filling lubricator and minimum level lubricator.

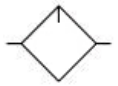

Symbol



Type	ML200-02	ML400-03,04	ML600-06,08
Port Size	1/4"	3/8" 1/2"	3/4" 1"
Fluid	Filtered compressed air		
Max. inlet pressure MPa	1.6		
bar	16		
psi	261		
Flow Rate at 6 bar (L/min)	700	3000	12800
Max Temperture at 1 Mpa (℃)	50℃		
Mounting Position	Vertical		

DIMENSIONS		1/4" (mm)	3/8" (mm)	1/2" (mm)	3/4" (mm)	1" (mm)
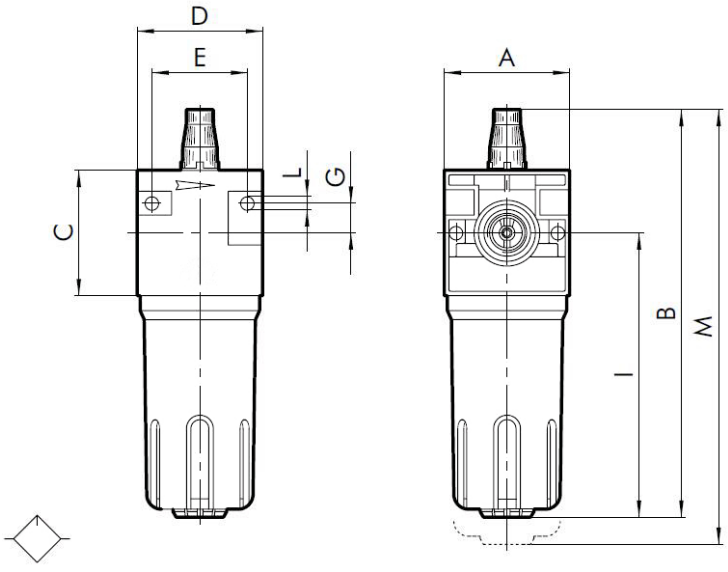	A	42	60		80	
	B	156	195		260	
	C	42	60		80	
	D	42	60		80	
	E	32	46		66	
	G	10	14		22	
	I	107	136		182	
	L	4.3	4.3		7.4	
	M	176	220		290	

Highly reliable heavy-duty piston-operated FRL unit.
1.Stability of the set pressure as the upstream pressure varies
2.Metal bowl with external sight glass
3.Semi-automatic and automatic condensate drain
4.Lubrication proportional to flow rate
5.Micrometric lubrication regulation
6.Activation guaranteed with low flow rates

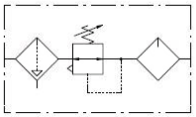

Symbol



Type	MC200-02	MC400-03,04	MC600-06,08
Port Size	1/4"	3/8" 1/2"	3/4" 1"
Fluid	compressed air		
Max. inlet pressure MPa	1.6		
bar	16		
psi	261		
Flow Rate at 6 bar (L/min)	140	1300	12800
Max Temperture at 1 Mpa (℃)	50℃		

DIMENSIONS

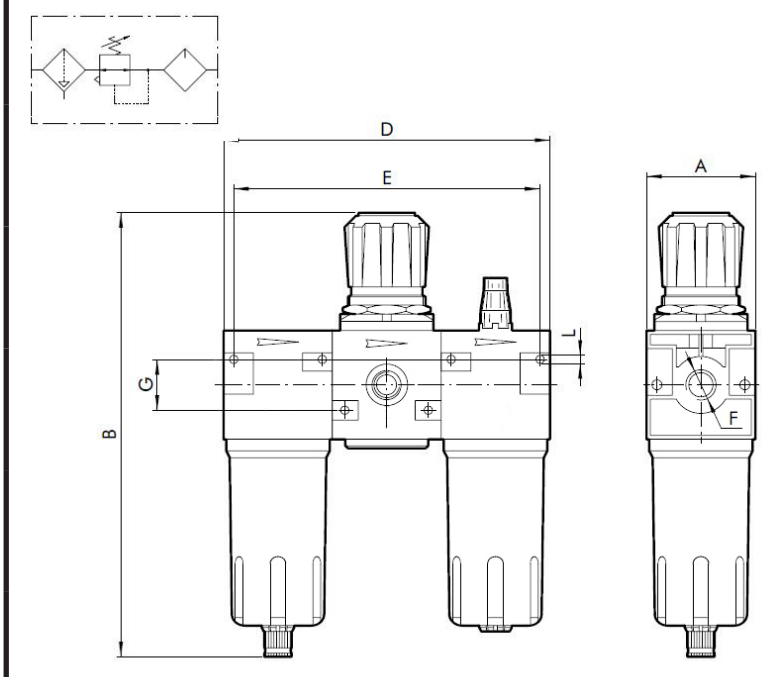

	1/4" (mm)	3/8" (mm)	1/2" (mm)	3/4" (mm)	1" (mm)
A	42	60		80	
B	190	245		332	
D	126	180		240	
E	116	166		226	
G	20	28		44	
L	4.3	4.3		7.4	

Modular FRL Unit
M Series FR.L

Heavy duty and reliable piston-operated FR+L unit.

1.Stability of the set pressure as the upstream pressure varies
2.Metal bowl with external sight glass
3.Semi-automatic and automatic condensate drain
4.Quantity of lubricant proportioned to air flow
5.Micrometric lubrication regulation
6.Activation guaranteed with low flow rates

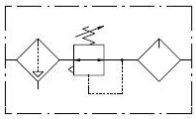

Symbol



Type	MC201-02	MC401-03,04
Port Size	1/4"	3/8" 1/2"
Fluid	Compressed air	
Max. inlet pressure MPa	1.6	
bar	16	
psi	261	
Flow Rate at 6 bar (L/min)	150	1300
Max Temperture at 1 Mpa (℃)	50℃	

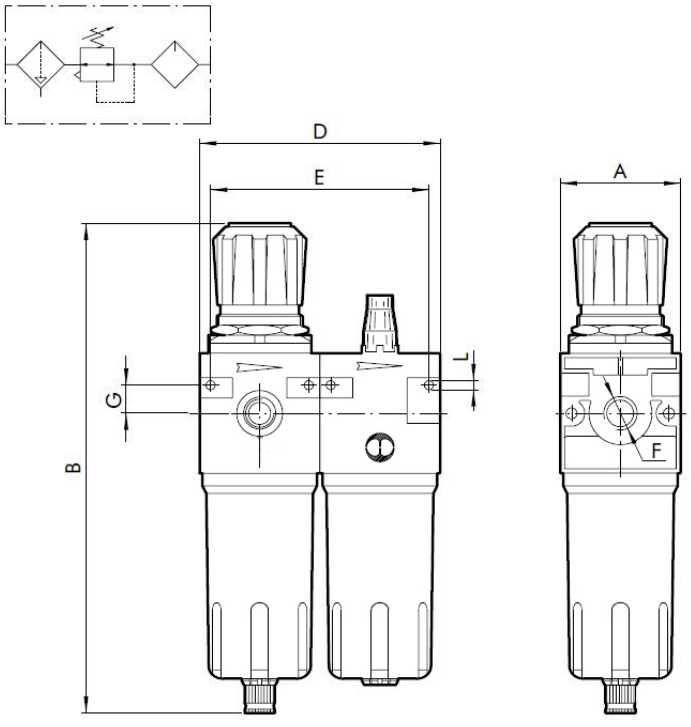

DIMENSIONS	1/4" (mm)	3/8" (mm) 1/2" (mm)
A	42	60
B	190	245
D	84	120
E	76	109
G	10	14
L	4.3	4.3

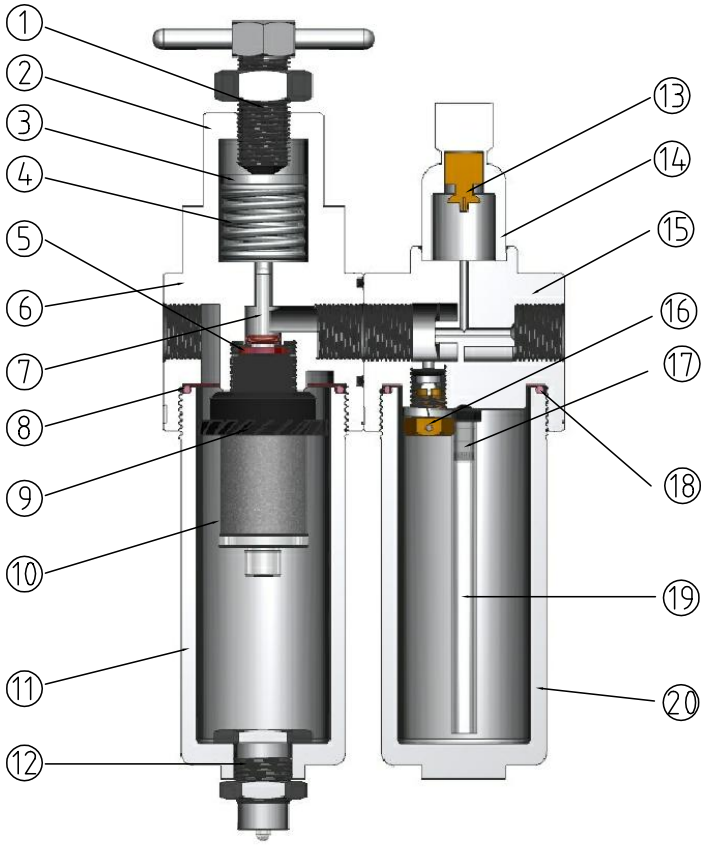

NO.	Description	Material	NO.	Description	Material
1	Pressure regulating screw	SUS316L	11	Filter bowl	SUS316L
2	Regulator base	SUS316L	12	Drain	SUS316L
3	Disc gasket	SUS316L	13	Oil adjusting screw	SUS316L
4	Spring	SS303	14	Screw cover	SUS316L
			15	Lubricator body	SUS316L
5	Piston	SUS316L	16	Plug	SUS316L
6	Regulator body	SUS316L	17	Oil pipe fitting	SUS316L
7	Pressure regulating needle	SUS316L	18	O-ring	VITON
8	O-ring	VITON	19	Oil pipe	PU
9	Filter element holder	SUS316L	20	Lubricator bowl	SUS316L
10	Filter element	SUS316L			

Modular FRL Unit

Stainless steel F.R.L combination



For high pressure use; corrosion and chemical resistance.
Good performance for outdoor facility.
Suitable for semi-conductor industry.
The product effectively removes water and particle.
Accurate and sensitive pressure setting.
Lubricator oil can be replenished without stopping air supply.
Oil spray in mist ensures good lubrication for machines.
Light weight, compact size for space saving.
High pressure resistant.

How to Order

SFRL 200-02

- 02 G 1/4", 03 G 3/8", 04 G 1/2" — Port size
- 200, 400, 600 — Body Size
- Stainless steel filter + regulator+lubricator — Series

Specification	
Model	SFRL-200/400/600
Port size	1/4" 3/8" 1/2" 3/4" 1"
Fluid	Compressed air
Regulator construction	Piston
Body material	Stainless steel SUS316
Bowl material	Stainless steel SUS316
Pressure gauge material	Case:Stainless steel SUS304, Thread: Stainless steel SUS316.
Filter element material	Stainless steel SUS316
Filtration accuracy	5μm(Standard) 40μm(Option)
Operating pressure range	0~20kgf/cm²
Proof pressure	30kgf/cm²
Ambient temperature	-10°C~70°C
Standard drain	Semi-auto drain(Drains below 0.5kgf/cm²)
Accessories	Pressure gauge(0~10kg), Mounting bracket, Plug, Screw×2
Accessories(Option)	Pressure gauge(0~25kg)

Dimensions

SFRL-200

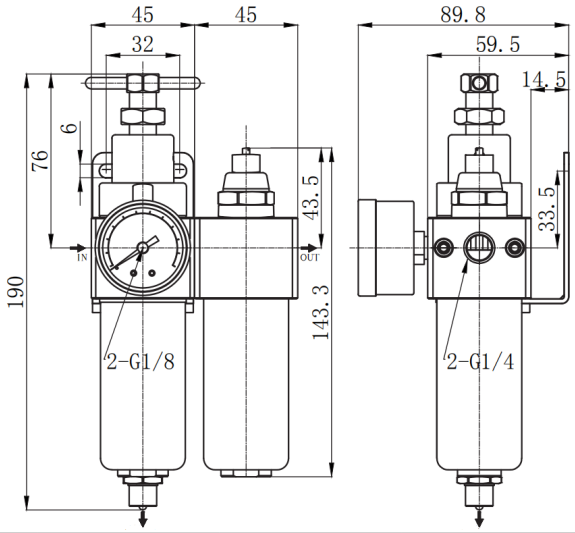

Model	Port size	Max flow rate	weight	Lubricator bowl capacity	Filter bowl capacity
SFRL-200-02	1/4"	1850l/min	2640g	105cc	125cc

SFRL-400

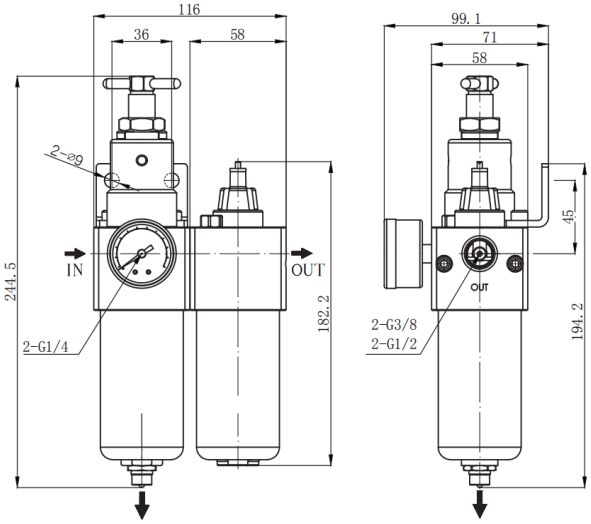

Model	Port size	Max flow rate	weight	Lubricator bowl capacity	Filter bowl capacity
SFRL-400-03	3/8"	2200l/min	3840g	110cc	130cc
SFRL-400-04	1/2"	2500l/min	3830g		

SFRL-600

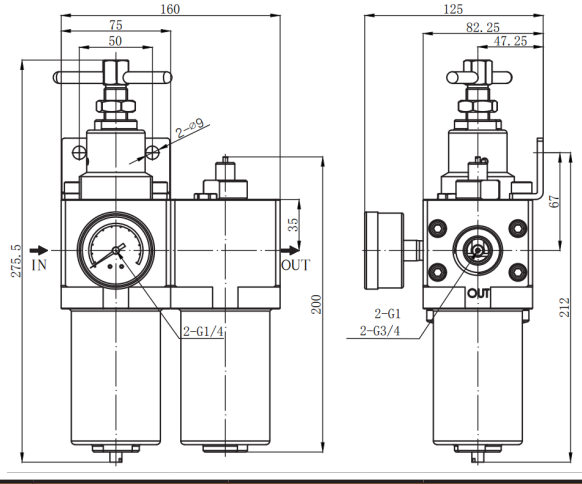

Model	Port size	Max flow rate	weight	Lubricator bowl capacity	Filter bowl capacity
SFRL-600-06	3/4"	7600l/min	7840g	200cc	220cc
SFRL-600-10	1"	8000l/min	7800g		

Modular FRL Unit
Stainless Steel Filter + Regulator



For high pressure use; corrosion and chemical resistance.
Good performance in chemically working environments and outdoor facility.
Suitable for semi-conductor industry.
Large flow rate and effectively removes water and particle.
Accurate and sensitive pressure setting.
Light weight; compact size for space saving.
High pressure resistant.

How to Order

SFR 200-02

- 02 G 1/4"
- 03 G 3/8"
- 04 G 1/2"

→ Port size

- 200
- 400
- 600

→ Body Size

Stainless steel filter + regulator → Series

Specification	
Model	SFR-200/400/600
Port size	1/4" 3/8" 1/2" 3/4" 1"
Fluid	Compressed air
Regulator construction	Piston
Body material	Stainless steel SUS316
Bowl material	Stainless steel SUS316
Pressure gauge material	Case:Stainless steel SUS304, Thread: Stainless steel SUS316.
Filter element material	Stainless steel SUS316
Filtration accuracy	5μm(Standard) 40μm(Option)
Operating pressure range	0~20kgf/cm²
Proof pressure	30kgf/cm²
Ambient temperature	-10°C~70°C
Standard drain	Semi-auto drain(Drains below 0.5kgf/cm²)
Accessories	Pressure gauge(0~10kg), Mounting bracket, Plug, Screw×2
Accessories(Option)	Pressure gauge(0~25kg)

Dimensions

SFR-200

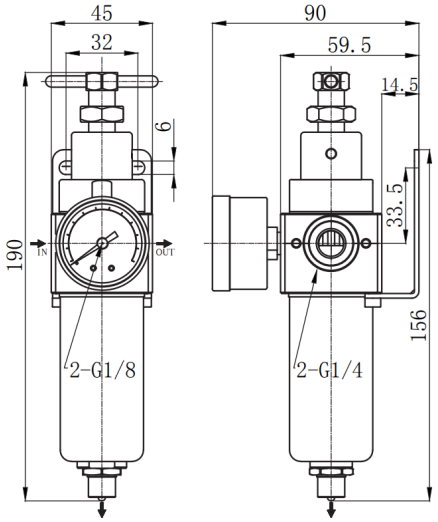

Model	Port size	Max flow rate	weight	Lubricator bowl capacity
SFR-200-02	1/4"	1850l/min	1340g	105cc

SFR-400

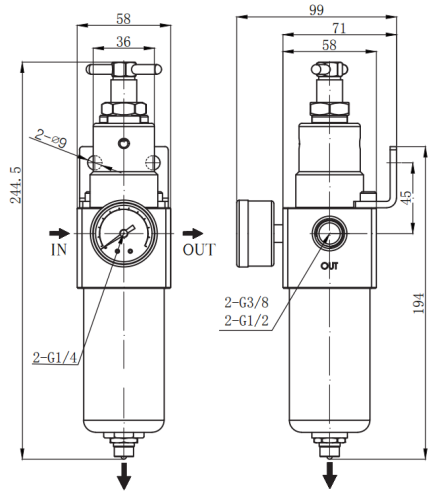

Model	Port size	Max flow rate	weight	Lubricator bowl capacity
SFR-400-03	3/8"	2200l/min	1960g	110cc
SFR-400-04	1/2"	2500l/min	1940g	

SFR-600

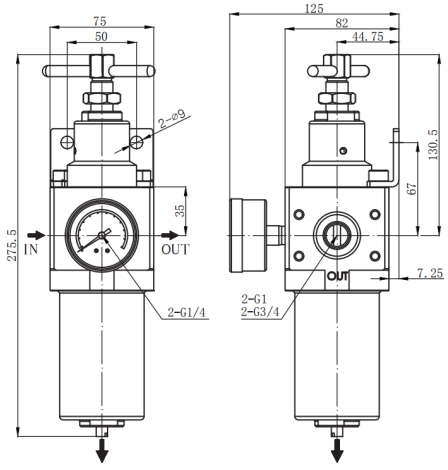

Model	Port size	Max flow rate	weight	Lubricator bowl capacity
SFR-600-06	3/4"	7600l/min	4520g	200cc
SFR-600-10	1"	8000l/min	4500g	

Modular FRL Unit
Stainless Steel Lubricator



For high pressure use; corrosion and chemical resistance.
Good performance in chemically working environments and outdoor facility.
Suitable for semi-conductor industry.
Large flow rate and effectively removes water and particle.
Accurate and sensitive pressure setting.
Light weight; compact size for space saving.
High pressure resistant.

How to Order

SL 200-02

- 02 G 1/4"
- 03 G 3/8"
- 04 G 1/2"

— Port size

- 200
- 400
- 600

— Body Size

Stainless steel lubricator — Series

Specification	
Model	SL-200/400/600
Port size	1/4" 3/8" 1/2" 3/4" 1"
Fluid	Compressed air
Body material	Stainless steel SUS316
Bowl material	Stainless steel SUS316
Operating pressure range	0~20kgf/cm²
Proof pressure	30kgf/cm²
Max flow rate	2500 l/min
Ambient temperature	-10°C~70°C
Accessories	Mounting bracket, Screw×2

Dimensions

SL-200

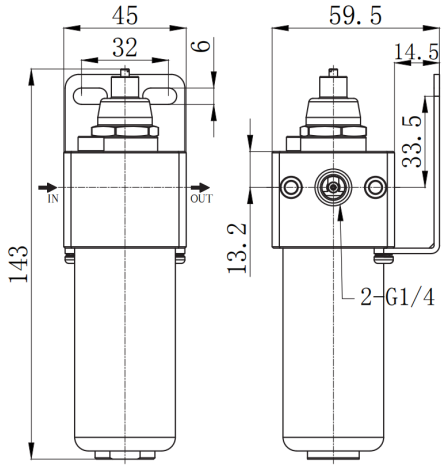

Model	Port size	Max flow rate	weight	Filter bowl capacity
SL-200-02	1/4"	2500l/min	1150g	125cc

SL-400

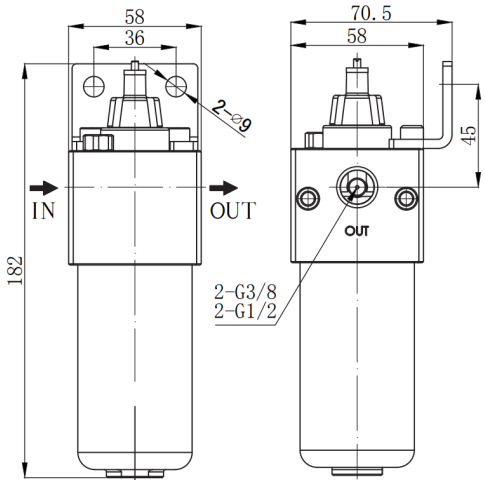

Model	Port size	Max flow rate	weight	Filter bowl capacity
SL-400-03	3/8"	2525l/min	1700g	130cc
SL-400-04	1/2"	4100l/min	1680g	

SL-600

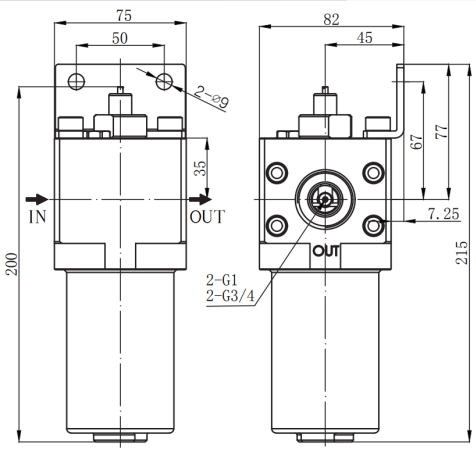

Model	Port size	Max flow rate	weight	Filter bowl capacity
SL-600-06	3/4"	13200l/min	3300g	200cc
SL-600-10	1"	13200l/min	3270g	

Modular FRL Unit
Stainless Steel Filter



For high pressure use; corrosion and chemical resistance.
Good performance in chemically working environments and outdoor facility.
Suitable for semi-conductor industry.
Large flow rate and effectively removes water and particle.
Accurate and sensitive pressure setting.
Light weight; compact size for space saving.
High pressure resistant.

How to Order

SF 200-02

- 02 G 1/4"
- 03 G 3/8"
- 04 G 1/2"

— Port size

- 200
- 400
- 600

— Body Size

Stainless steel filter — Series

Specification	
Model	SF-200/400/600
Port size	1/4" 3/8" 1/2" 3/4" 1"
Fluid	Compressed air
Body material	Stainless steel SUS316
Bowl material	Stainless steel SUS316
Filter element material	Stainless steel SUS316
Filtration accuracy	5μm(Standard) 40μm(Option)
Operating pressure range	0~20kgf/cm²
Proof pressure	30kgf/cm²
Ambient temperature	-10°C~70°C
Standard drain	Semi-auto drain(Drains below 0.5kgf/cm²)
Accessories	Pressure gauge(0~10kg), Mounting bracket, Plug, Screw×2

Dimensions

SF-200

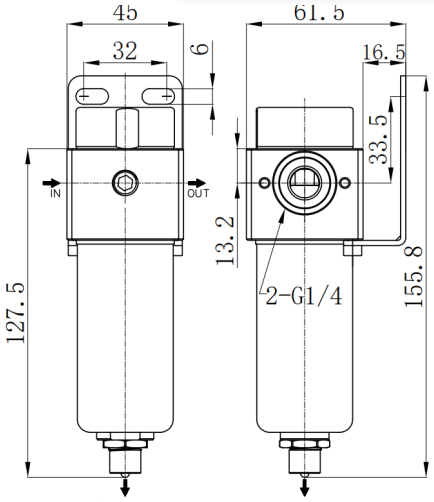

Model	Port size	Max flow rate	weight	Filter bowl capacity
SF-200-02	1/4"	1900l/min	1240g	105cc

SF-400

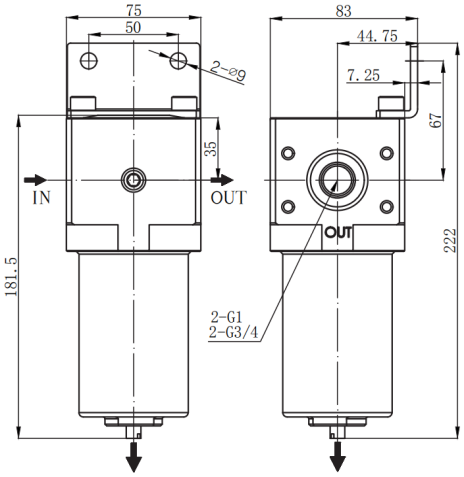

Model	Port size	Max flow rate	weight	Filter bowl capacity
SF-400-03	3/8"	2450l/min	1630g	110cc
SF-400-04	1/2"	3030l/min	1600g	

SF-600

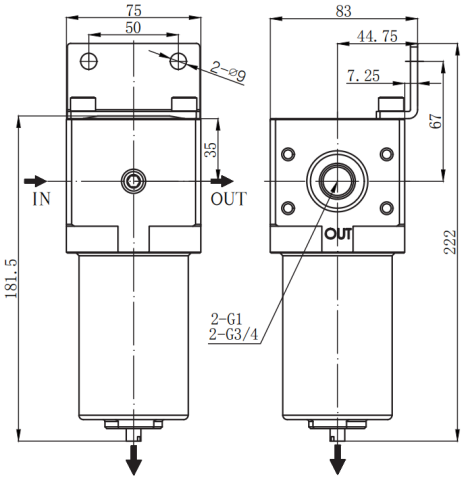

Model	Port size	Max flow rate	weight	Filter bowl capacity
SF-600-06	3/4"	9600l/min	3900g	110cc
SF-600-10	1"	9600l/min	3800g	

Modular FRL Unit
Stainless Steel Regulator



For high pressure use; corrosion and chemical resistance.
Good performance in chemically working environments and outdoor facility.
Suitable for semi-conductor industry.
Large flow rate and effectively removes water and particle.
Accurate and sensitive pressure setting.
Light weight; compact size for space saving.
High pressure resistant.

How to Order

SR 200-02

- 02 G 1/4"
- 03 G 3/8"
- 04 G 1/2"

— Port size

- 200
- 400
- 600

— Body Size

Stainless steel regulator — Series

Specification	
Model	SR-200/400/600
Port size	1/4" 3/8" 1/2" 3/4" 1"
Fluid	Compressed air
Regulator construction	Piston
Body material	Stainless steel SUS316
Pressure gauge material	Case:Stainless steel SUS304, Thread: Stainless steel SUS316.
Operating pressure range	0~20kgf/cm²
Proof pressure	30kgf/cm²
Ambient temperature	-10°C~70°C
Accessories	Pressure gauge(0~10kg), Mounting bracket, Plug, Screw×2
Accessories(Option)	Pressure gauge(0~25kg)

Dimensions

SR-200

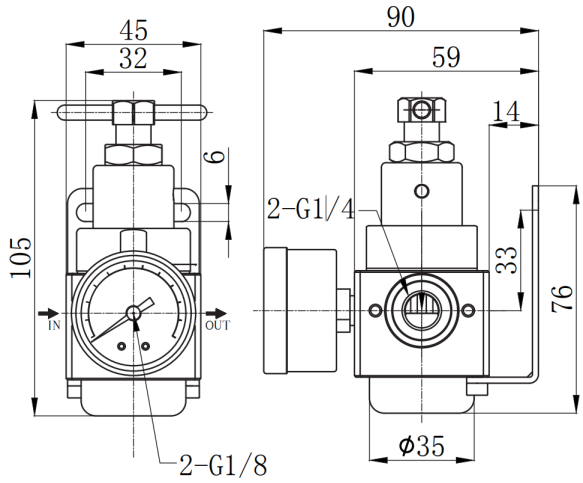

Model	Port size	Max flow rate	weight
SR-200-02	1/4"	1850l/min	1150g

SR-400

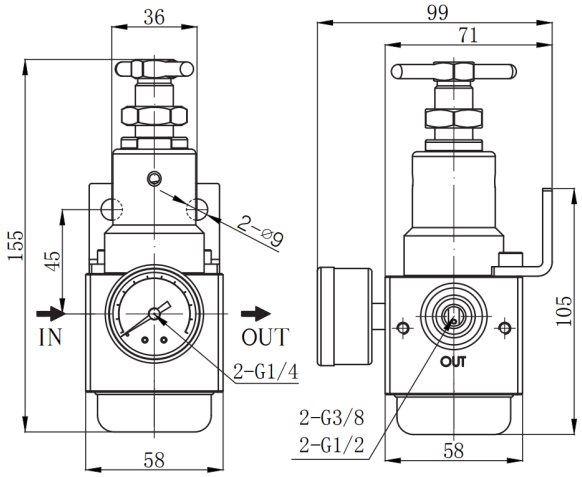

Model	Port size	Max flow rate	weight
SR-400-03	3/8"	2250l/min	1350g
SR-400-04	1/2"	2520l/min	1300g

SR-600

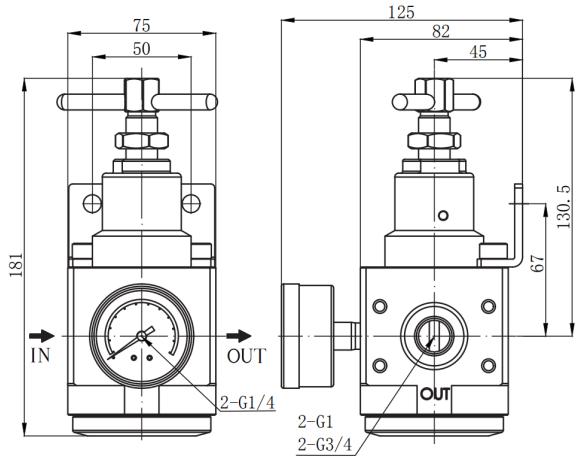

Model	Port size	Max flow rate	weight
SR-600-06	3/4"	9000l/min	3300g
SR-600-10	1"	9400l/min	3200g