XHNOTION



# AIR CYLINDER

## CALCULATIONS FOR AIR CONSUMPTION

$QA = (A1+A2) \times L \times (P +1.033)/1.033 \times 10^{-3}$

$QB = 2 \times A3 \times LH \times (P +1.033)/1.033 \times 10^{-3}$

$Qn = (QA + QB) \times n$

Qn: Air consumption of Cylinder actuating/ each time (L/min)
QA：Air volume for cylinder actuating to and back/ each time (L/min)
QB：Air Consumption Valume of Accessaries（Valve the Cylinder）（L/min）
A1：Push Side Pressured Area (cm2)
A2：Pull Side Pressured Area (cm2)
A3：ID of Connecting tube (cm2)
L：Stroke of cylinder (cm)
LH：Length of tube(cm)
P：Operating Pressure (kgf/cm2)
n：Operating Frequency

## CYLINDER THEORY FORCE OUTPUT SHEET

| Cylinder Inside Diameter | | 32 | | 40 | | 50 | | 63 | |
|---|---|---|---|---|---|---|---|---|---|
| External Diameter Piston Rod | | 12 | | 16 | | 20 | | 20 | |
| Operation | | Double Acting | | Double Acting | | Double Acting | | Double Acting | |
| | | Extrusion side | Pull side | Extrusion side | Pull side | Extrusion side | Pull side | Extrusion side | Pull side |
| Compression Area(cm2) | | 8.04 | 6.9 | 12.56 | 10.55 | 19.63 | 16.49 | 31.17 | 28.03 |
| Air Pressure (Kgf/cm2) | 1 | 8.04 | 6.9 | 12.56 | 10.55 | 19.63 | 16.49 | 31.17 | 28.03 |
| | 2 | 16.08 | 13.8 | 25.12 | 21.1 | 39.26 | 32.98 | 62.34 | 56.06 |
| | 3 | 24.12 | 20.7 | 37.68 | 31.65 | 58.89 | 49.47 | 93.51 | 84.09 |
| | 4 | 32.16 | 27.6 | 50.24 | 42.2 | 78.52 | 65.96 | 124.65 | 112.12 |
| | 5 | 40.2 | 34.5 | 62.8 | 52.75 | 98.15 | 82.45 | 155.85 | 140.15 |
| | 6 | 48.24 | 41.4 | 75.36 | 63.3 | 117.78 | 98.94 | 187.02 | 168.18 |
| | 7 | 56.28 | 48.3 | 87.92 | 73.85 | 137.41 | 115.43 | 218.19 | 196.21 |
| | 8 | 64.32 | 55.2 | 100.48 | 84.4 | 157.04 | 131.92 | 249.36 | 224.24 |
| | 9 | 72.36 | 62.1 | 113.04 | 94.95 | 176.67 | 148.41 | 280.53 | 252.27 |

| Cylinder Inside Diameter | | 80 | | 100 | | 125 | | 160 | | 200 | |
|---|---|---|---|---|---|---|---|---|---|---|---|
| External Diameter Piston Rod | | 25 | | 25 | | 32 | | 40 | | 40 | |
| Operation | | Double Acting | | Double Acting | | Double Acting | | Double Acting | | Double Acting | |
| | | Extrusion side | Pull side | Extrusion side | Pull side | Extrusion side | Pull side | Extrusion side | Pull side | Extrusion side | Pull side |
| Compression Area(cm2) | | 50.26 | 45.36 | 78.53 | 73.62 | 122.7 | 114.6 | 201 | 188.4 | 314.2 | 301.4 |
| Air Pressure (Kgf/cm2) | 1 | 50.26 | 45.36 | 78.53 | 73.62 | 122.7 | 114.6 | 201 | 188.4 | 314.2 | 301.4 |
| | 2 | 100.52 | 90.27 | 157.06 | 147.24 | 245.4 | 229.2 | 402 | 376.8 | 628.4 | 602.8 |
| | 3 | 150.78 | 136.08 | 235.59 | 220.86 | 236.1 | 343.8 | 603 | 565.2 | 942.6 | 904.2 |
| | 4 | 210.04 | 18144 | 314.12 | 294.48 | 490.8 | 458.4 | 804 | 753.6 | 1256.8 | 1205.6 |
| | 5 | 251.3 | 226.8 | 392.65 | 368.1 | 613.5 | 573 | 1005 | 942 | 1571 | 1507 |
| | 6 | 301.56 | 272.16 | 471.18 | 441.72 | 736.2 | 687.6 | 1206 | 1130.4 | 1885.2 | 1808.4 |
| | 7 | 351.82 | 317.52 | 549.71 | 515.34 | 858.9 | 802.2 | 1407 | 1318.8 | 2199.4 | 2109.8 |
| | 8 | 402.08 | 362.88 | 628.24 | 588.96 | 981.6 | 916.8 | 1608 | 1507.2 | 2513.6 | 2411.2 |
| | 9 | 452.34 | 408.24 | 706.77 | 662.58 | 1104.3 | 1031.4 | 1809 | 1695.6 | 2827.8 | 2712.6 |


☎+86 574 82823826 | Fax +86 574 82823825 | sales@xhnotion.com | Web: www.xhnotion.com

# AIR CYLINDER

## DNC ISO15552 STANDARD CYLINDER



## FEATURES

Front, real cover and piston are made of aluminum alloy die - they are made by high precision CNC. Barrel is made of hard anodised aluminum.
Piston rod is made of chromed carbon steel.

Unique cushion technique makes smooth action, long time service and no need lubrication maintenance.

Admit to add sensor to control the stroke easily.

## HOW TO ORDER

| DNC | D | 50 | 50 | 25 | LB | MT |
|---|---|---|---|---|---|---|
| Series | Series Code | Bore | Stroke | Adjustable Stroke | Mounting | Sensor |
| DNC:ISO 15552 standard cylinder | Blank: Standard double acting<br>D: Double-shaft double acting<br>J: Double-shaft with adjustable stroke | | | | Blank: Basic mounting<br>LB: Front and back mounting<br>FA: Front mounting flange<br>FB: Rear mounting flange<br>CA: Rear clevis(Single earring)<br>CB: Rear clevis(Double earring)<br>YB: Rear hinge | |

## SPECIFICATIONS

| Bore (mm) | 32 | 40 | 50 | 63 | 80 | 100 | 125 |
|---|---|---|---|---|---|---|---|
| Motion pattern | Double acting | | | | | | |
| Working medium | Air | | | | | | |
| Mountings | Basic FA, FB, CA, CB, LB, YB | | | | | | |
| Working pressure | 1~9.0 Kgf/cm2 | | | | | | |
| Proof pressure | 13.5 Kgf/cm$^2$ | | | | | | |
| Operating temperature range | 0-70℃ | | | | | | |
| Operating speed range | 50~800 mm/s | | | | | | |
| Cushion | Adjustable cushioning | | | | | | |
| Adjustable cushioning stroke | 20mm | | | | 26mm | | |
| Port size | G 1/8" | G 1/4" | | G 3/8" | | G 1/2" | |

## STROKE

| Bore (mm) | Standard Stroke | | | | | | | | | | | | | | | | | | | | | Max stroke | Allowable stroke |
|---|---|---|---|---|---|---|---|---|---|---|---|---|---|---|---|---|---|---|---|---|---|---|---|
| 32 | 25 | 50 | 75 | 80 | 100 | 125 | 150 | 160 | 175 | 200 | 250 | 300 | 350 | 400 | 450 | 500 | | | | | | 1000 | 2000 |
| 40 | 25 | 50 | 75 | 80 | 100 | 125 | 150 | 160 | 175 | 200 | 250 | 300 | 350 | 400 | 450 | 500 | 600 | 700 | 800 | | | 1200 | 2000 |
| 50 | 25 | 50 | 75 | 80 | 100 | 125 | 150 | 160 | 175 | 200 | 250 | 300 | 350 | 400 | 450 | 500 | 600 | 700 | 800 | 900 | 1000 | 1200 | 2000 |
| 63 | 25 | 50 | 75 | 80 | 100 | 125 | 150 | 160 | 175 | 200 | 250 | 300 | 350 | 400 | 450 | 500 | 600 | 700 | 800 | 900 | 1000 | 1500 | 2000 |
| 80 | 25 | 50 | 75 | 80 | 100 | 125 | 150 | 160 | 175 | 200 | 250 | 300 | 350 | 400 | 450 | 500 | 600 | 700 | 800 | 900 | 1000 | 1500 | 2000 |
| 100 | 25 | 50 | 75 | 80 | 100 | 125 | 150 | 160 | 175 | 200 | 250 | 300 | 350 | 400 | 450 | 500 | 600 | 700 | 800 | 900 | 1000 | 1500 | 2000 |
| 125 | 25 | 50 | 75 | 80 | 100 | 125 | 150 | 160 | 175 | 200 | 250 | 300 | 350 | 400 | 450 | 500 | 600 | 700 | 800 | 900 | 1000 | 1500 | 2000 |

# AIR CYLINDER

## DSN ISO6432 CYLINDER



## FEATURES

Front, real cover and piston are made of aluminum alloy die - they are made by high precision CNC. Barrel is made of Stainless steel.
Piston rod is made of chromed carbon steel.

Use import non-lubrication oil seals in order to reach high speed movement.

Single acting and double acting are chosen in a lot of variety.

All DSN series are with magnet ring around piston.

## HOW TO ORDER

| DSN | U | 20 | 50 | 25 | LB | MT |
|---|---|---|---|---|---|---|
| Series | Series Code | Bore | Stroke | Adjustable Stroke | Mounting | Sensor |

**Series**
DSN:Double acting
DSNT: Single acting, spring-out
DSNS: Single acting, spring-in
DSND: Double-shaft, double acting
DSNJ: Double-shaft with adjustable stroke

**Series Code**
Blank: Standard with eye mounting
CM: Round rear cover
U: Flat rear cover

**Mounting**
Blank: Basic mounting
LB: Front and back mounting
FA: Front mounting flange
FB: Rear mounting flange
SDB: Rear hinge

## SPECIFICATIONS

| Bore (mm) | 12 | 16 | 20 | 25 | 32 | 40 |
|---|---|---|---|---|---|---|
| Motion pattern | Double acting or Single acting | | | | | |
| Working medium | Air | | | | | |
| Mountings | Basic FA, LB, SDB | | | | | |
| Working pressure | 1~9.0 Kgf/cm$^2$ | | | | | |
| Proof pressure | 13.5 Kgf/cm$^2$ | | | | | |
| Operating temperature range | 0-70℃ | | | | | |
| Operating speed range | 50~800 mm/s | | | | | |
| Cushion | Gasket cushioning | Adjustable cushioning | | | | |
| Port size | M5*0.8 | G1/8" | | | | |

## STROKE

| Bore (mm) | Standard Stroke | | | | | | | | | | | | | | | | Max stroke | Allowable stroke |
|---|---|---|---|---|---|---|---|---|---|---|---|---|---|---|---|---|---|---|
| 12 | 25 | 50 | 75 | 80 | 100 | 125 | 150 | 160 | 175 | 200 | | | | | | | 300 | 500 |
| 16 | 25 | 50 | 75 | 80 | 100 | 125 | 150 | 160 | 175 | 200 | | | | | | | 300 | 500 |
| 20 | 25 | 50 | 75 | 80 | 100 | 125 | 150 | 160 | 175 | 200 | 250 | 300 | | | | | 500 | 650 |
| 25 | 25 | 50 | 75 | 80 | 100 | 125 | 150 | 160 | 175 | 200 | 250 | 300 | 350 | 400 | 450 | 500 | 500 | 650 |
| 32 | 25 | 50 | 75 | 80 | 100 | 125 | 150 | 160 | 175 | 200 | 250 | 300 | 350 | 400 | 450 | 500 | 500 | 650 |
| 40 | 25 | 50 | 75 | 80 | 100 | 125 | 150 | 160 | 175 | 200 | 250 | 300 | 350 | 400 | 450 | 500 | 500 | 650 |


☎+86 574 82823826 | Fax +86 574 82823825 | sales@xhnotion.com | Web: www.xhnotion.com

# AIR CYLINDER

## MA STAINLESS STEEL MINI CYLINDER



## FEATURES

Front, real cover and piston are made of aluminum alloy die - they are made by high precision CNC. Barrel is made of Stainless steel.
Piston rod is made of chromed carbon steel.

Use import non-lubrication oil seals in order to reach high speed movement.

Single acting and double acting are chosen in a lot of variety.

## HOW TO ORDER

| MA | D | 50 | 50 | 25 | S | LB | MT |
|---|---|---|---|---|---|---|---|
| Series | Series Code | Bore | Stroke | Adjustable Stroke | Magnet | Mounting | Sensor |

**Series**
MA: Double acting
MSA: Single acting, sprung-out
MTA: Single acting, spring-in
MAD: Double-shaft, double acting
MAJ: Double-shaft with adjustable stroke

**Series Code**
Blank: Standard with eye mounting
Blank: Fishtail type
CM: Round rear cover
U: Flat rear cover

**Magnet**
S: With magnet
Blank: Without magnet

**Mounting**
Blank: Basic mounting
LB: Front and back mounting
FA: Front mounting flange
FB: Rear mounting flange
SDB: Rear hinge

## SPECIFICATIONS

| Bore (mm) | 16 | 20 | 25 | 32 | 40 |
|---|---|---|---|---|---|
| Motion pattern | Double acting or Single acting | | | | |
| Working medium | Air | | | | |
| Mountings | Basic FA, LB, SDB | | | | |
| Working pressure | 1~9.0 Kgf/cm2 | | | | |
| Proof pressure | 13.5 Kgf/cm2 | | | | |
| Operating temperature range | 0-70℃ | | | | |
| Operating speed range | 50~800 mm/s | | | | |
| Cushion | Gasket cushioning | | | | |
| Port size | M5X0.8 | G1/8" | | | |

## STROKE

| Bore (mm) | Standard Stroke | | | | | | | | | | | | | | | | Max stroke | Allowable stroke |
|---|---|---|---|---|---|---|---|---|---|---|---|---|---|---|---|---|---|---|
| 16 | 25 | 50 | 75 | 80 | 100 | 125 | 150 | 160 | 175 | 200 | | | | | | | 300 | 500 |
| 20 | 25 | 50 | 75 | 80 | 100 | 125 | 150 | 160 | 175 | 200 | 250 | 300 | | | | | 500 | 650 |
| 25 | 25 | 50 | 75 | 80 | 100 | 125 | 150 | 160 | 175 | 200 | 250 | 300 | 350 | 400 | 450 | 500 | 500 | 650 |
| 32 | 25 | 50 | 75 | 80 | 100 | 125 | 150 | 160 | 175 | 200 | 250 | 300 | 350 | 400 | 450 | 500 | 500 | 650 |
| 40 | 25 | 50 | 75 | 80 | 100 | 125 | 150 | 160 | 175 | 200 | 250 | 300 | 350 | 400 | 450 | 500 | 500 | 650 |

# AIR CYLINDER

## MAL ALUMINUM ALLOY MINI CYLINDER



## FEATURES

Front, real cover are made of aluminum alloy die - they are made by high precision CNC.
Barrel is made of anodised aluminum.
Piston rod is made of chromed carbon steel.

Use import non-lubrication oil seals in order to reach high speed movement.

Single acting and double acting are chosen in a lot of variety.

## HOW TO ORDER

| MAL | U | 20 | 50 | 25 | S | LB | MT |
|---|---|---|---|---|---|---|---|
| Series | Series Code | Bore | Stroke | Adjustable Stroke | Magnet | Mounting | Sensor |

**Series**
MAL: Double acting
MTAL: Single acting, spring-out
MSAL: Single acting, spring-in
MALD: Double-shaft, double acting
MALJ: Double-shaft with adjustable stroke

**Series Code**
Blank: Fishtail type
CM: Round rear cover
U: Flat rear cover

**Magnet**
S: With magnet
Blank: Withoutmagnet

**Mounting**
Blank: Basic mounting
LB: Front and back mounting
FA: Front mounting flange
FB: Rear mounting flange
SDB: Rear hinge

## SPECIFICATIONS

| Bore (mm) | 16 | 20 | 25 | 32 | 40 |
|---|---|---|---|---|---|
| Motion pattern | Double acting or Single acting | | | | |
| Working medium | Air | | | | |
| Mountings | Basic FA, LB, SDB | | | | |
| Working pressure | 1~9.0 Kgf/cm2 | | | | |
| Proof pressure | 13.5 Kgf/cm2 | | | | |
| Operating temperature range | 0-70℃ | | | | |
| Operating speed range | 50~800 mm/s | | | | |
| Cushion | Gasket cushioning | | | | |
| Port size | M5X0.8 | G1/8" | | | G1/4" |

## STROKE

| Bore (mm) | Standard Stroke | | | | | | | | | | | | | | | | Max stroke | Allowable stroke |
|---|---|---|---|---|---|---|---|---|---|---|---|---|---|---|---|---|---|---|
| 16 | 25 | 50 | 75 | 80 | 100 | 125 | 150 | 160 | 175 | 200 | | | | | | | 300 | 500 |
| 20 | 25 | 50 | 75 | 80 | 100 | 125 | 150 | 160 | 175 | 200 | 250 | 300 | | | | | 500 | 650 |
| 25 | 25 | 50 | 75 | 80 | 100 | 125 | 150 | 160 | 175 | 200 | 250 | 300 | 350 | 400 | 450 | 500 | 500 | 650 |
| 32 | 25 | 50 | 75 | 80 | 100 | 125 | 150 | 160 | 175 | 200 | 250 | 300 | 350 | 400 | 450 | 500 | 500 | 650 |
| 40 | 25 | 50 | 75 | 80 | 100 | 125 | 150 | 160 | 175 | 200 | 250 | 300 | 350 | 400 | 450 | 500 | 500 | 650 |


☎+86 574 82823826 | Fax +86 574 82823825 | sales@xhnotion.com | Web: www.xhnotion.com



SC 32X50



SU 32X50

## FEATURES

Front, real cover and piston are made of aluminum alloy die - they are made by high precision CNC. Barrel is made of anodised aluminum.
Piston rod is made of chromed carbon steel.

Long time service and maintenance free.

Admit to add sensor to control the stroke easily. Fit for Asia market.

## HOW TO ORDER

| SC | D | 50 | 50 | 25 | S | LB | MT |
|---|---|---|---|---|---|---|---|
| Series | Series Code | Bore | Stroke | Adjustable Stroke | Magnet | Mounting | Sensor |
| SC: Tie rod type<br>SU: Profile type | Blank: Standard double acting<br>D: Double-shaft double acting<br>J: Double-shaft with adjustable stroke type | | | | S: With magnet<br>Blank: Without magnet | Blank: Basic mounting<br>LB: Foot<br>FA: Front mounting flange<br>FB: Rear mounting flange<br>CA: Rear hinge<br>CB: Rear hinge<br>TC-M: Center trunnion | 21 Type<br>SC: Bracket for switch<br>SU: Bracket for switch |

## SPECIFICATIONS

| Bore (mm) | 32 | 40 | 50 | 63 | 80 | 100 | 125 | 160 | 200 | 250 | 320 |
|---|---|---|---|---|---|---|---|---|---|---|---|
| Motion pattern | Double acting | | | | | | | | | | |
| Working medium | Air | | | | | | | | | | |
| Mountings | Basic FA, FB, CA, CB, LB, TC, TC-M | | | | | | | | | | |
| Working pressure | 1~9.0 Kgf/cm$^2$ | | | | | | | | | | |
| Proof pressure | 13.5 Kgf/cm$^2$ | | | | | | | | | | |
| Operating temperature range | 0-70℃ | | | | | | | | | | |
| Operating speed range | 50~800 mm/s | | | | | | | | | | |
| Cushion | Adjustable cushioning | | | | | | | | | | |
| Adjustable cushioning stroke | 20mm | | | | 26mm | | | 45mm | 52mm | | 66mm |
| Port size | G 1/8" | G 1/4" | | G 3/8" | | G 1/2" | | G3/4" | G1" | | |

## STROKE

| Bore (mm) | Standard Stroke | | | | | | | | | | | | | | | | | | | | | Max stroke | Allowable stroke |
|---|---|---|---|---|---|---|---|---|---|---|---|---|---|---|---|---|---|---|---|---|---|---|---|
| 32 | 25 | 50 | 75 | 80 | 100 | 125 | 150 | 160 | 175 | 200 | 250 | 300 | 350 | 400 | 450 | 500 | | | | | | 1000 | 2000 |
| 40 | 25 | 50 | 75 | 80 | 100 | 125 | 150 | 160 | 175 | 200 | 250 | 300 | 350 | 400 | 450 | 500 | 600 | 700 | 800 | | | 1200 | 2000 |
| 50 | 25 | 50 | 75 | 80 | 100 | 125 | 150 | 160 | 175 | 200 | 250 | 300 | 350 | 400 | 450 | 500 | 600 | 700 | 800 | 900 | 1000 | 1200 | 2000 |
| 63 | 25 | 50 | 75 | 80 | 100 | 125 | 150 | 160 | 175 | 200 | 250 | 300 | 350 | 400 | 450 | 500 | 600 | 700 | 800 | 900 | 1000 | 1500 | 2000 |
| 80 | 25 | 50 | 75 | 80 | 100 | 125 | 150 | 160 | 175 | 200 | 250 | 300 | 350 | 400 | 450 | 500 | 600 | 700 | 800 | 900 | 1000 | 1500 | 2000 |
| 100 | 25 | 50 | 75 | 80 | 100 | 125 | 150 | 160 | 175 | 200 | 250 | 300 | 350 | 400 | 450 | 500 | 600 | 700 | 800 | 900 | 1000 | 1500 | 2000 |
| 125 | 25 | 50 | 75 | 80 | 100 | 125 | 150 | 160 | 175 | 200 | 250 | 300 | 350 | 400 | 450 | 500 | 600 | 700 | 800 | 900 | 1000 | 1500 | 2000 |
| 160 | 25 | 50 | 75 | 80 | 100 | 125 | 150 | 160 | 175 | 200 | 250 | 300 | 350 | 400 | 450 | 500 | 600 | 700 | 800 | 900 | 1000 | 1500 | 2000 |
| 200 | 25 | 50 | 75 | 80 | 100 | 125 | 150 | 160 | 175 | 200 | 250 | 300 | 350 | 400 | 450 | 500 | 600 | 700 | 800 | 900 | 1000 | 1500 | 2000 |
| 250 | 25 | 50 | 75 | 80 | 100 | 125 | 150 | 160 | 175 | 200 | 250 | 300 | 350 | 400 | 450 | 500 | 600 | 700 | 800 | 900 | 1000 | 1500 | 2000 |
| 320 | 25 | 50 | 75 | 80 | 100 | 125 | 150 | 160 | 175 | 200 | 250 | 300 | 350 | 400 | 450 | 500 | 600 | 700 | 800 | 900 | 1000 | 1500 | 2000 |

# AIR CYLINDER

## CQ2B MINI CYLINDER



## FEATURES

Barrel is made of anodised aluminum.
Piston rod is made of chromed carbon steel.

Space-saving cylinder designed with a compact body.
Use import non-lubrication oil seals in order to reach high speed movement.

Single acting and double acting are chosen in a lot of variety.

## HOW TO ORDER

| CDQ2 | B | 20 | 30 | 25 | D | C | MT |
|---|---|---|---|---|---|---|---|
| Inner Magnet<br>Blank: Without magnet<br>D: With magnet | Mountings<br>B: Topped stroke length on 4 holes<br>A: Both end thread hole | Bore | Stroke<br>As S/M chart | Adjustable Stroke | Operation<br>D: Double acting<br>W: Double shaft<br>XC8: Stroke adjustable<br>S: Single acting (Spring-in)<br>T: Single Acting (Spring-out)<br>*Bore size of single acting cylinder is from 12-50 | Thread<br>Blank: Female thread<br>M: Male thread<br>C: Rubber buffer | Sensor<br>D-A73 |

## SPECIFICATIONS

| Bore (mm) | 12 | 16 | 20 | 25 | 32 | 40 | 50 | 63 | 80 | 100 |
|---|---|---|---|---|---|---|---|---|---|---|
| Motion pattern | Double acting or Single acting | | | | | | | | | |
| Working medium | Air | | | | | | | | | |
| Max Working pressure | 1.0 Mpa | | | | | | | | | |
| Proof pressure | 1.5 Mpa | | | | | | | | | |
| Operating temperature range | 5-60℃ | | | | | | | | | |
| Piston rod thread | Female thread(standard), Male thread (Optional) | | | | | | | | | |
| Cushion | Non-lub | | | | | | | | | |
| Piston acting speed | 50-500mm/s | | | | | | | | | |
| Tolerance Stroke | +1.0mm | | | | | | | | | |
| Lubricant | Non-lub | | | | | | | | | |
| Installation | Through hole(Standard), Two side dove talls (Optional) | | | | | | | | | |
| Port size | M5*0.8 | | | | G1/8 | | G1/4 | | G3/8 | |

## STROKE

| Bore | Standard Stroke (mm) | | *With Sensor |
|---|---|---|---|
| 12.16 | 5, 10, 15, 20, 25, 30 | 5.10 | D-A72L D-A76L<br>D-A73L D-A80L<br>D-F78L D-J79L |
| 20,25 | 5, 10, 15, 20, 25, 30, 35, 40, 45, 50 | | |
| 32,40 | 5, 10, 15, 20, 25, 30, 35, 40, 45, 50, 75, 100 | | |
| 50 | 10, 15, 20, 25, 30, 35, 40, 45, 50, 75, 100 | 10.20 | |
| 63,80,100 | | - | |

* To choose proper sensor switch, please refer to sensor switch pages.
Lead wire length code as follow:
Blank -0.5m, L-3m, Z-5m
Example: A72,A72L
* For slide installation.


☎+86 574 82823826 | Fax +86 574 82823825 | sales@xhnotion.com | Web: www.xhnotion.com



## FEATURES

Barrel is made of anodised aluminum.
Piston rod is made of chromed carbon steel.

Compact structure can effectively save installation space.
Use import non-lubrication oil seals in order to reach high speed movement.
There are magnetic switch slots around the cylinder body,which is convenient to install sensor switch.

Single acting and double acting are chosen in a lot of variety.

## HOW TO ORDER

| SDA | D | 20 | 30 | 25 | S | B | MT |
|---|---|---|---|---|---|---|---|
| Series<br>Compact Cylinder | Series Code<br>SDA: Double acting<br>STA: Single acting, spring-in<br>SSA: Single acting, spring-out<br>SDAD: Double-shaft type<br>SDAJ: Adjustable stroke | Bore | Stroke | Adjustable Stroke | Magnet<br>S: With magnet<br>Blank: Without magnet | Thread Type<br>Blank: Female thread<br>B: Male thread<br>N: No thread | Sensor<br>JEL-11 Type |

## SPECIFICATIONS

| Bore (mm) | 12 | 16 | 20 | 25 | 32 | 40 | 50 | 63 | 80 | 100 |
|---|---|---|---|---|---|---|---|---|---|---|
| Motion pattern | Double acting or Single acting | | | | | | Double acting | | | |
| Working medium | Air | | | | | | | | | |
| Working pressure | 1~9.0 Kgf/cm$^2$ for double acting, 2-9.0 Kgf/cm$^2$ for single acting | | | | | | | | | |
| Proof pressure | 10.5 Kgf/cm$^2$ | | | | | | | | | |
| Operating temperature range | 0-70 ℃ | | | | | | | | | |
| Operating speed range | 30~500 mm/s | | | | | 30~350 mm/s | | 30~250 mm/s | | |
| | 100-500 mm/s | | | | | - | | | | |
| Port size | M5*0.8 | | | | G1/8 | | G1/4 | | G3/8 | |

## STROKE

| Bore (mm) | | 12 16 | 20 | 25 | | 32 40 50 63 80 100 | |
|---|---|---|---|---|---|---|---|
| Double Acting | Without Magnet | 5-60 mm Classified every 5 mm | 5-85 mm Classified every 5 mm | 5-90 mm Classified every 5 mm | 100-110 mm Classified every 5 mm | 5-90 mm Classified every 5 mm | 100-130 mm Classified every 10 mm |
| | With Magnet | 5-50 mm Classified every 5 mm | 5-75 mm Classified every 5 mm | 5-90 mm Classified every 5 mm | 100 mm | 5-90 mm Classified every 5 mm | 100-120 mm Classified every 10 mm |
| Single Acting | Without Magnet | 5-30 mm Classified every 5 mm | 5-30 mm Classified every 5 mm | 5-30 mm Classified every 5 mm | | 5-30 mm Classified every 5 mm | - |
| | With Magnet | 5-30 mm Classified every 5 mm | 5-30 mm Classified every 5 mm | 5-30 mm Classified every 5 mm | | 5-30 mm Classified every 5 mm | - |
| Max. Stroke | | 60mm | 100mm | 120mm | | 130mm | |

# AIR CYLINDER

## CJ2 (Φ6-Φ16)STAINLESS STEEL MINI CYLINDER



## FEATURES

Front, real cover and piston are made of aluminum alloy die - they are made by high precision CNC. Barrel is made of Stainless steel.
Piston rod is made of chromed carbon steel.

Use import non-lubrication oil seals in order to reach high speed movement.

Single acting and double acting are chosen in a lot of variety.

The series is available in bore sizes 6, 10, 16mm and stroke lengths from 15mm through 200mm depending upon bore size.

## HOW TO ORDER

| CDJ2 | B | F | 6 | 15 | R | MT |
|---|---|---|---|---|---|---|
| Inner Magnet<br>Blank: Without magnet<br>D: With magnet | Mountings<br>B: Bacis type<br>D: Double earing (except ø6) | Foot<br>F: Rod side flange type<br>L: Axial foot type | Bore | Stroke | Position of port on end cover without rod<br>Blank: Radial (except ø6)<br>R: Axial<br><br>Available with radial double bearing type only. | Sensor<br>Blank: Without sensor |

## SPECIFICATIONS

| Bore (mm) | 6 | 10 | 16 |
|---|---|---|---|
| Motion pattern | Double acting | | |
| Working medium | Air | | |
| Min. Operation Pressure | 1.05 Mpa | | |
| Max. Operation Pressure | 0.7 Mpa | | |
| Operating temperature range | 5-60℃ | | |
| Cushion | Rubber Gasket Cushioning / Air Cushioning | | |
| Piston acting speed | 50-750mm/s | | |
| Tolerance Stroke | +1.0mm | | |
| Lubricant | Non-lub | | |
| Port size | M5X0.8 | | |

## STROKE

*To choose proper sensor switch, please refer to stroke/ sensor switch chart.
Lead wire length code: Blank - 0.5 m, L - 3 m. Example: C73, C73L.
No additional accessary is required for sliding type of sensor switch installation.

| Bore | Standard Stroke (mm) | Sensor Switch Code | Sensor Switch Code (Direct installation) | Channel installation type Sensor switch |
|---|---|---|---|---|
| | | Tie-up Type Sensor Switch | | Not Suitable |
| 6 | 15, 30, 45, 60 | D-C73L D-H7A1L D-C76L DH7BL D-C80L | BJ2-006 | D-A72L D-A73L D-A76L D-A80L D-F79L D-J79L |
| 10 | 5, 10, 15, 20, 25, 30, 35, 40, 45, 50 | | BJ2-010 | |
| 16 | 5, 10, 15, 20, 25, 30, 35, 40, 45, 50, 75, 100 | | BJ2-016 | |


☎+86 574 82823826 | Fax +86 574 82823825 | sales@xhnotion.com | Web: www.xhnotion.com



## FEATURES

Barrel is made of anodised aluminum.
Piston rod is made of chromed carbon steel.

Use import non-lubrication oil seals in order to reach high speed movement.

Using the dual rod construction, easily reaches non-rotating accuracy and twice the cylinder thrust.

TN series attached magnetic ring.

## HOW TO ORDER

| TN | 20 | 50 | MT |
|---|---|---|---|
| Type<br>TN: Double-shaft double acting | Bore | Stroke | Sensor<br>CSI-J |

## SPECIFICATIONS

| Bore (mm) | 10 | 16 | 20 | 25 | 32 |
|---|---|---|---|---|---|
| Motion pattern | Double acting | | | | |
| Working medium | Air | | | | |
| Working pressure | 0.1~0.9 MPa | | | | |
| Ensure Pressure Resistance | 1.35 MPa | | | | |
| Operating temperature range | 0-70 ℃ | | | | |
| Operating speed range | 100-500 mm/s | | | | |
| Adjustable Stroke | -10~0 mm | | | | |
| Cushion | Not Available | Cushioning Gasket | | | |
| Presion Of Non-rotating | 0.4° | 0.3° | | | |
| Port size | M5X0.8 | | | | PT 1/8” |

The Max. operating pressure is subject to the Max. load of hydralic buffer.

## STROKE

| Bore (mm) | Standard Stroke | Max. Stroke | Allowable Stroke |
|---|---|---|---|
| 10 | 10 20 30 40 50 60 70 | 70 | 100 |
| 16 | 10 20 30 40 50 60 70 80 90 100 125 150 | 150 | 200 |
| 20 | 10 20 30 40 50 60 70 80 90 100 125 150 | 150 | 200 |
| 25 | 10 20 30 40 50 60 70 80 90 100 125 150 | 150 | 200 |
| 32 | 10 20 30 40 50 60 70 80 90 100 125 150 | 150 | 200 |

# AIR CYLINDER

## CXS (Φ6-Φ32)TWIN ROD BASIC TYPE CYLINDER



## FEATURES

Barrel is made of anodised aluminum.
Piston rod is made of chromed carbon steel.

Use import non-lubrication oil seals in order to reach high speed movement.

Using the dual rod construction, easily reaches non-rotating accuracy and twice the cylinder thrust.
It is suited for accurate pick-and-place applications or light duty material handling.

CXS series attached magnetic ring.

## HOW TO ORDER

| CXSM | 20 | 100 | MT |
|---|---|---|---|
| Bearing Type<br>M: Slidable bearing<br>L: Ball bearing | Bore | Stroke<br>As S/M chart | Sensor<br>D-Z73 |

## SPECIFICATIONS

| Bore (mm) | 6 | 10 | 15 | 20 | 25 | 32 |
|---|---|---|---|---|---|---|
| Motion pattern | Double acting | | | | | |
| Working medium | Air | | | | | |
| Proof Pressure | 1.05 MPa | | | | | |
| Max. Operation Pressure | 0.7 MPa | | | | | |
| Operating temperature range | 5-60 ℃ | | | | | |
| Buffer | Both end Rubber Gasket Cushioning | | | | | |
| Operating speed range | 30-800 mm/s | 30-800 mm/s | 30-700 mm/s | | 30-600 mm/s | |
| Lubrication | Non-lub | | | | | |
| Adjustable Stroke | Returned Stroke 0 ～ -5 mm | | | | | |
| Bearing | Slidable bearing/Ball Bearing | | | | | |
| Presion Of Non-rotating | ± 0.1° | | | | | |
| Port size | M5X0.8 | | | | | PT 1/8” |
| Structure | Double Cylinder (Double force) | | | | | |

## STROKE

| Bore | Standard Stroke (mm) | Sensor Switch Model (Install by Orbit type) |
|---|---|---|
| 6 | 10, 20, 30, 40, 50 | D-Z73L D-Z76L<br>D-Z80L D-Y59AL D-Y59BL |
| 10 | 10, 15, 20, 25, 30, 40, 45,50, 60, 70,75 | |
| 15 | 10, 15, 20, 25, 30, 40, 45,50, 60, 70, 75, 80, 90, 100 | |
| 20 | | |
| 25 | | |
| 32 | | |


☎+86 574 82823826 | Fax +86 574 82823825 | sales@xhnotion.com | Web: www.xhnotion.com



## FEATURES

Barrel is made of anodised aluminum.
Piston rod is made of chromed carbon steel.

Use import non-lubrication oil seals in order to reach high speed movement.

Light weight and compact. Easy for installation. Position of both side ports are changeable.

Strong transverse load capacity and torque capacity.

High Non-rotating precision.

Both ball joint or slide joint are available for directional bearing for directional rod.

## HOW TO ORDER

| MGPM | 32 | 50 | MT |
|---|---|---|---|
| Bearing Type<br>M: Slidable bearing<br>L: Ball bearing | Bore | Stroke | Sensor |

## SPECIFICATIONS

| Bore (mm) | | 12 | 16 | 20 | 25 | 32 | 40 | 50 | 63 | 80 | 100 |
|---|---|---|---|---|---|---|---|---|---|---|---|
| Motion pattern | | Double acting | | | | | | | | | |
| Working medium | | Air | | | | | | | | | |
| Anti-pressure testing pressure | | 1.5 MPa | | | | | | | | | |
| Max. Operation Pressure | | 1.0 MPa | | | | | | | | | |
| Min. Operation Pressure | | 0.12 MPa | | | | | | | | | |
| Operating temperature range | | -10 -60 ℃ | | | | | | | | | |
| Operating speed range | | 50~500 mm/s | | | | | | | | 50~400 mm/s | |
| Buffer | | Rubber Buffer | | | | | | | | | |
| Stroke Tolerance | | +1.5 mm | | | | | | | | | |
| *Lubrication | | Non-lub | | | | | | | | | |
| Bearing | | Slidable bearing/Ball Bearing | | | | | | | | | |
| Presion Of Non-rotating | Slidable bearing | ± 0.08° | | ± 0.07° | | ± 0.06° | | ± 0.05° | | ± 0.04° | |
| | Ball Bearing | ± 0.10° | | ± 0.09° | | ± 0.08° | | ± 0.06° | | ± 0.05° | |
| Port size | | M5X0.8 | | PT 1/8” | | | | PT 1/4” | | PT 3/8” | |

* If lubricant is demanded, please choose clear No.1 lubricant, ISOVG32.

## STROKE

| Bore (mm) | Standard Stroke (mm) | ** Sensor Switch Optional Model (For slide installation) |
|---|---|---|
| 12, 16 | 10, 20, 30, 40, 50, 75, 100 | D-Z73L D-Z76L D-Z80L<br>D-Y59AL D-Y59BL |
| 20, 25 | 20, 30, 40, 50, 75, 100, 125, 175, 200 | |
| 32, 40, 50, 63, 80, 100 | 20, 50, 75, 100, 125, 150, 175, 200 | |

* Strokes from 5, 10, 20, 30, 35.....are added with 5, 10, 15, 20 mm thick gasket respectively,
ex: MGPM50-10 is with 15 mm thickness gasket (MGPM50-25).

## CYLINDER MOUNTING ACCESSORIES


CB


CR


FA/FB


CA


TC


LDB


LFA


LB

## ROD END FITTINGS


YC


Y


AB


PFJ


AI

## SENSOR BEND AND CLAMP


BK, PAB, PBM
Steel fixed band


SC, IH, PI, PM SERIES
Clamp

## MAGNET SWITCH


CS1-U


CS1-F


CS1-J


CS1-H


☎+86 574 82823826 | Fax +86 574 82823825 | sales@xhnotion.com | Web: www.xhnotion.com

## ASSEMBLY KITS

### SI KITS

Bore size: 32mm, 40mm, 63mm, 80mm, 100mm, 125MM, 160MM, 200MM



### SDA KITS

Bore size: 12mm, 16mm, 20mm, 25mm, 32mm, 40MM, 50MM, 63MM, 80MM, 100MM



### DNC KITS

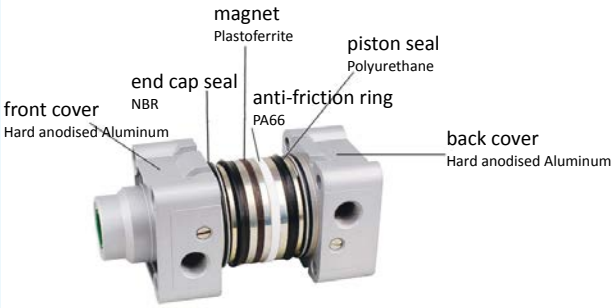


### SC KITS

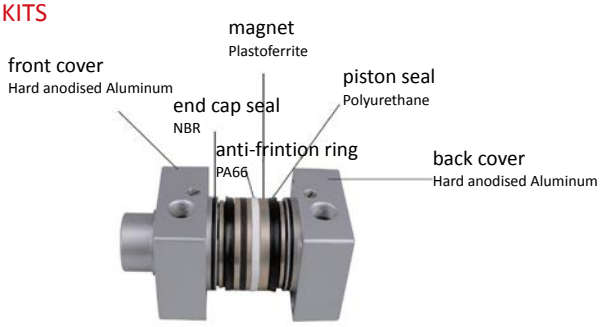


### MAL KITS

Bore size: 16mm, 20mm, 25mm, 32mm, 40mm



### MA KITS

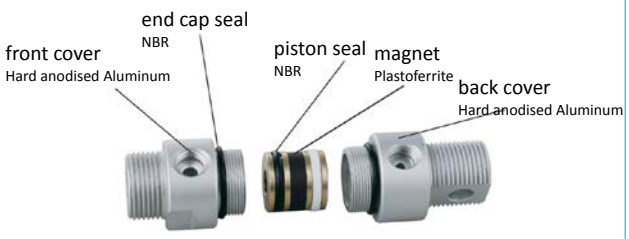


## TUBE AND PISTON ROD FOR PNEUMATIC CYLINDER



SI Tube



DNC Tube



SC MAL Tube



Piston Rod

# AIR CYLINDER

## CDU SERIES FREE INSTALLATION CYLINDER



## FEATURES

Barrel is made of anodised aluminum.
Piston rod is made of chromed carbon steel.

Light weight and compact. Easy for installation. Position of both side ports are changeable.

Strong transverse load capacity and torque capacity.

## INSTALLATION

Axially mounted

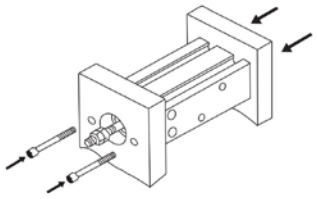

Longitudinally mounted

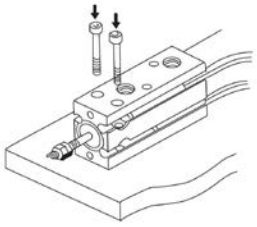

Side-mounted

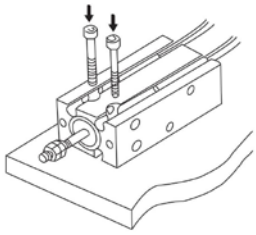

## HOW TO ORDER

| CDU | K | D | 20 | 30 | S | MT |
|---|---|---|---|---|---|---|
| Series<br>CU: Without maganet<br>CDU: With magnet | Series Code<br>Blank: Basic type<br>K: Non-rotating | Series Code<br>SDA: Double acting<br>STA: Single acting, spring-in<br>SSA: Single acting, spring-out | Bore | Stroke | Magnet<br>S: With magnet<br>Blank: Without magnet | Sensor |

## SPECIFICATIONS

| Bore (mm) | 6 | 10 | 16 | 20 | 25 | 32 |
|---|---|---|---|---|---|---|
| Motion pattern | Double acting; Single acting, spring-in; Sing acting, spring out | | | | | |
| Working medium | Air | | | | | |
| Max. Operation Pressure | 0.7 MPa | | | | | |
| Operating temperature range | 5 -60 ℃ | | | | | |
| Cushion | Both end with rubber gasket cushioning | | | | | |
| Stroke Tolerance | +1.5 mm | | | | | |
| *Lubrication | Non-lub | | | | | |
| Installation Type | Free(multi-installation) | | | | | |
| Precision non-rotating rod | ± 0.0.8° | | | | | ± 0.5° |
| Port size | M5X0.8 | | 1/8” | | | |

## STROKE

| | Bore (mm) | 6,10,16 | 20,25,32 |
|---|---|---|---|
| Standard Stroke | Double Acting | 5mm, 10mm, 15mm, 20mm, 25mm, 30mm | 5mm, 10mm, 15mm, 20mm, 25mm, 30mm, 40mm, 50mm |
| | Single Acting | 5mm,10mm,15mm | |
| Stroke Length | Double Acting | 40mm, 50mm, 60mm | 60mm, 70mm, 80mm, 90mm, 100mm |



☎+86 574 82823826 | Fax +86 574 82823825 | sales@xhnotion.com | Web: www.xhnotion.com

# AIR CYLINDER

## ADVU SERIES COMPACT CYLINDER



## FEATURES

Barrel is made of anodised aluminum.
Piston rod is made of chromed carbon steel.

Compact structure can effectively save installation space.
Use import non-lubrication oil seals in order to reach high speed movement.

## HOW TO ORDER

| ADVU | 20 | 30 | 25 | D | C |
|---|---|---|---|---|---|
| Inner Magnet | Bore | Stroke | Adjustable Stroke | Operation | Thread |

**Inner Magnet**
Blank: Without magnet
D: With magnet

*The dimensions of magnet type cylinder are the same as non-magnet type cylinder

**Operation**
D: Double acting
SE: Single acting Extrusion type
SD: Single acting Drawing-in type
DD: Double-shalf Double action type
DA: Double-shalf Adjustable stroke type

**Thread**
Blank: Female thread
M: Male thread
C: Rubber buffer

## SPECIFICATIONS

| Bore (mm) | 12 | 16 | 20 | 25 | 32 | 40 | 50 | 63 | 80 | 100 |
|---|---|---|---|---|---|---|---|---|---|---|
| Motion pattern | Double acting | | | | | | | | | |
| | Single acting Drawing-in type, Single acting Drawing-in type | | | | | | | | | |
| Working medium | Air | | | | | | | | | |
| Ensured pressure resistance | 1.5 MPa | | | | | | | | | |
| Max. Operation Pressure | 1.0 MPa | | | | | | | | | |
| Operating temperature range | -20 -80 ℃ | | | | | | | | | |
| Double action operating speed range | 0.1- 1.0 Mpa | | | | | | | | | |
| Single action operationg speed range | 0.2- 1.0Mpa | | | | | | | | | |
| Piston veocity | Double action:30- 500mm/s Single action:50- 500mm/s | | | | | | | | | |
| Buffering | Fixed type buffer | | | | | | | | | |
| Port size | M5 X 0.8 | | | | G1/8 | | | | | G1/4 |

## STROKE

| Bore (mm) | Standard Stroke | Max. Stroke | Allowable Stroke |
|---|---|---|---|
| 12 | 10 20 30 40 50 65 | 65 | 115 |
| 16 | 10 20 30 40 50 65 | 65 | 115 |
| 20 | 10 20 30 40 50 60 70 80 90 100 | 130 | 180 |
| 25 | 10 20 30 40 50 60 70 80 90 100 110 120 130 | 130 | 180 |
| 32 | 10 20 30 40 50 60 70 80 90 100 110 120 130 | 130 | 180 |
| 40 | 10 20 30 40 50 60 70 80 90 100 110 120 130 | 130 | 180 |
| 50 | 10 20 30 40 50 60 70 80 90 100 110 120 130 | 130 | 180 |
| 63 | 10 20 30 40 50 60 70 80 90 100 110 120 130 | 130 | 180 |
| 80 | 10 20 30 40 50 60 70 80 90 100 110 120 130 | 130 | 180 |
| 100 | 10 20 30 40 50 60 70 80 90 100 110 120 130 | 130 | 180 |



Symbol

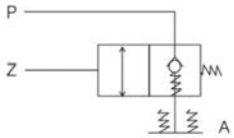


## FEATURES

Maintaining pressure.

Preventing leakage.

Accuracy position holding.

Special load design applications.

## SPECIFICATION

| Model | Working Pressure $(kg/cm)^2$ | Working Temperature (℃) | Cross-section Area $(mm)^2$ | Frequency (times/min) | Weight (g) | Recommend Cylinder Bore |
|---|---|---|---|---|---|---|
| PC02 | 0.5- 9.5 | -10- 70℃ | 24 | 60 | 100 | ≤50 |
| PC04L | 0.5- 9.5 | -10- 70℃ | 79 | 40 | 340 | 100-125 |
| PC04 | 0.5- 9.5 | -10- 70℃ | 79 | 40 | 340 | 63-80 |

## DRAWING

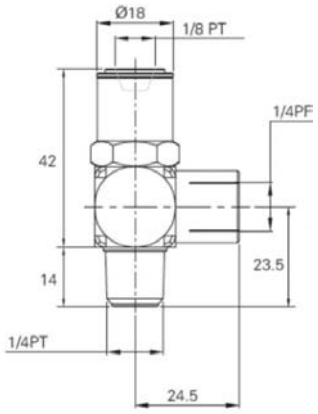


PC-02

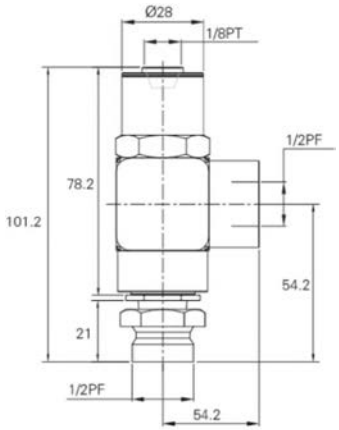


PC-04L

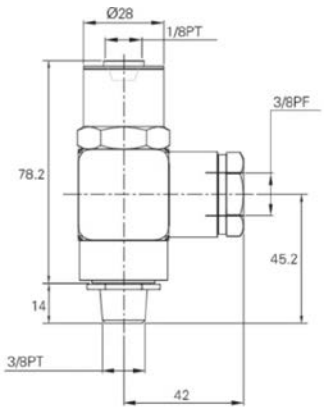


PC-04

## APPLICATION

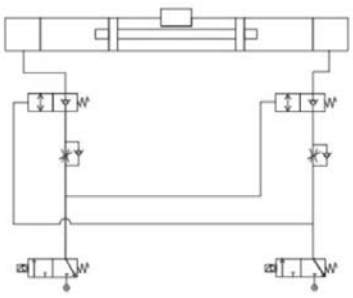

Precise positioning

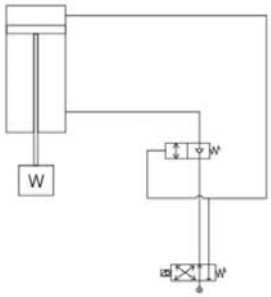


Maintaining pressure


☎+86 574 82823826 | Fax +86 574 82823825 | sales@xhnotion.com | Web: www.xhnotion.com