

CNC workshop



Plastic injection machine



Assemblage workshop



Warehouse

ABOUT US

XHnotion pneumatic, founded in 2007, is a leading manufacturer of pneumatic components and solenoid valve in China. We have two production bases for below products

- Air cylinder, air actuator
- Air preparation (FRL)
- Pneumatic directional valve to control air direction
- Pneumatic fittings for connecting
- Air hose - PU hose, nylon tubing, PE pipe, PVC hose, PTFE tubes
- Air gun for blowing dust
- Quick coupling for fast connecting and dis-connecting
- Solenoid valve to control fluid
- Other components, like mufflers, nozzle, kits, tire gun, water fittings, modular hose etc

This success of XHnotion Pneumatic is based on:

High class quality standard - many products get CE, ROHS, Reach certificates

Customer satisfaction - fast response to customer's requirements.

Fair price policy - check the cost carefully, and give customer the best prices as we can

Flexibility - Custom the products as customer request and accept various payment terms



CERTIFICATE

ISO9001

EUROSWISS CERTIFICATION

Quality Management System Certificate

Certificate No.: 37822Q12549R0S

Certify that

NINGBO XHNOTION PNEUMATIC TECHNOLOGY CO.,LTD.

Unified social credit Code: 91330205591561079X

Add.: Room 12-4, No. 312, Lane 645, Renmin Road, Jiangbei District, Ningbo, ZheJiang

Zip Code: 315020

The management system is in conformity with standard

GB/T19001-2016 / ISO9001:2015

SCOPE OF CERTIFICATION

Pneumatic components, air tools accessories, air filter, automobile parts, valve development and sales

In the provisions of the state's administrative, qualification with a valid license validity
Subject to operation in consistent conformity with the above criteria this certificate valid for three years on effective date

Validity Of Certification: March.30,2022 To: March.29,2025
Date of First Registration: March.30,2022
Date of Issue/Reissue: March.30,2022

(The validity of the certificate shall be maintained by EuroSwiss certification through regular supervision and audit. Conditions on effectiveness of certificate see official website of Certification and Accreditation Administration of People's of Republic of China http://www.cnca.gov.cn and http://www.cnesc.com.cn, This certificate is valid until March.29,2023)

IAF MUTUAL RECOGNITION ARRANGEMENT

CNAS 中国认可 国际互认 管理体系 MANAGEMENT SYSTEM CNAS C258-M

EUROSWISS CERTIFICATION CO., LTD. 认证有限公司

Issued By

EuroSwiss Certification Co., Ltd.

Room 1201, Unit 2, Building 1, Around Business Center, Ningwei, Xiaoshan, Hangzhou, P.R.C.

Safenet Limited

Denford Garage, Denford, Kettering, Northants., NN14 4EQ, U.K.

Tel: +44 1832 732174 e-mail: office@safenet.co.uk

European Notified Body 1674

Certificate of Conformity

This is to certify that

Ningbo Xhnotion Pneumatic Technology Co., Ltd.

No. 16, Gaoqiang Road, Shitang Industrial Zone, Gaoqiao Town, Ningbo, China

Has had a range of Solenoid Valves examined with regards to the Electromagnetic Compatibility Directive 2004/108/EC.

With reference to model **PMC**

Manufactured by:

Ningbo Xhnotion Pneumatic Technology Co., Ltd.

No. 16, Gaoqiang Road, Shitang Industrial Zone, Gaoqiao Town, Ningbo, China

1. The technical construction file contains all the relevant information.
2. Having verified that the appropriate tests have been conducted, with regard to the PMC representing the range.
   - 2.1. The example has been manufactured in accordance with the technical construction file and may be used under the intended conditions.
   - 2.2. The standards and transposed standards as the case may be, have been applied correctly.
   - 2.3. The example has conformity with the protection requirements of Electromagnetic Compatibility Directive 2004/108/EC.
   - 2.4. The technical file contains all the information required to include the following models PMC, 2N, 3N, XP, BD, BP, BT, BH, XLA, 2W, 2L, 2WP, 2VP, 4V, 2C, UW, XLG, XCM, XCT, XPM, MCF and 0927.

Certificate Number: 3045180713

Date: 24/07/2013

Signed for Safenet Limited

Technical Manager

CE EMC Directive Number 1674

This Document remains the property of Safenet Ltd and will be returned to them if so requested. Safenet will review the continued compliance of the machinery on a 5 yearly cycle to check for changes in the state of the art.

SGS

Test Report No. NGBHG1606143001 Date: 27 Dec 2016 Page 2 of 7

Test Results :

Test Part Description :

Specimen No.	SGS Sample ID	Description
SN1	NGB16-061430.001	Silvery metal screw
SN2	NGB16-061430.002	Silvery metal big part
SN3	NGB16-061430.003	White plastic big part
SN4	NGB16-061430.004	Black soft plastic ring
SN5	NGB16-061430.005	White soft plastic wire jacket

Remarks :
(1) 1 mg/kg = 0.0001%
(2) MDL = Method Detection Limit
(3) ND = Not Detected (< MDL)
(4) "-" = Not Regulated

RoHS Directive 2011/65/EU

Test Method : (1) With reference to IEC 62321-5:2013, determination of Cadmium by ICP-OES.
(2) With reference to IEC 62321-5:2013, determination of Lead by ICP-OES.
(3) With reference to IEC 62321-4:2013, determination of Mercury by ICP-OES.
(4) With reference to IEC 62321:2008, determination of Hexavalent Chromium by Colorimetric Method using UV-Vis.
(5) With reference to IEC 62321-6:2015, determination of PBBs and PBDEs by GC-MS.

Test Item(s)	Limit	Unit	MDL	003	004	005
Cadmium (Cd)	100	mg/kg	2	ND	ND	ND
Lead (Pb)	1000	mg/kg	2	ND	19	ND
Mercury (Hg)	1000	mg/kg	2	ND	ND	ND
Hexavalent Chromium (CrVI)	1000	mg/kg	2	ND	ND	ND
Sum of PBBs	1000	mg/kg	-	ND	ND	ND
Monobromobiphenyl	-	mg/kg	5	ND	ND	ND
Dibromobiphenyl	-	mg/kg	5	ND	ND	ND
Tribromobiphenyl	-	mg/kg	5	ND	ND	ND
Tetrabromobiphenyl	-	mg/kg	5	ND	ND	ND
Pentabromobiphenyl	-	mg/kg	5	ND	ND	ND
Hexabromobiphenyl	-	mg/kg	5	ND	ND	ND
Heptabromobiphenyl	-	mg/kg	5	ND	ND	ND
Octabromobiphenyl	-	mg/kg	5	ND	ND	ND

Devote to Pneumatic Component and Flow Control

HOW TO SELECT
Solenoid Valve

Valve Type	☐ 2/2 way	☐ 2/3 way	☐ 2/5 way	
Acting Way	☐ Normally Closed		☐ Normally Open	
Coils	☐ F grade (for normal temperature)		☐ H grade (for high temperature)	
	☐ X coil (explosion-proof coil)		☐ DIN connector coil	
	☐ Wiring type			
Voltages	☐ AC ☐ V		☐ DC ☐ V	
	☐ Any requirements about power consumption?			
Medium	☐ Air	☐ Water	☐ Hot water	☐ Steam
	☐ Light oil	☐ Gas	☐ Others ☐	
Medium Temperature	☐ ℃			
Valve Material	☐ Brass	☐ SS304	☐ SS316	
	☐ Others ☐			
Min. Pressure	☐ kgf/cm2			
Max. Pressure	☐ kgf/cm2			
Connecting Thread	☐ G thread ☐		☐ NPT thread ☐	
	☐ Flange connection			
Orifice	☐ Φ ☐ mm			
Application Environment	☐ Environment Temperature ☐ ℃			
	☐ Outdoors	☐ Indoors	☐ Underwater	
	☐ Others ☐			
Special Requirements				

PRODUCTS INDEX

4	2N 2W DIRECT ACTING SOLENOID VALVE PAGE 07~16
4	XP PILOT SOLENOID VALVE / BI - STABLE VALVE PAGE 17~21
4	HIGH TEMPERATURE / STEAM SOLENOID VAVE PAGE 25-29
4	HIGH PRESSURE SOLENOID VALVE PAGE 30~36
4	PLASTIC SOLENOID VALVE PAGE 40~50
4	3 WAY SOLENOID VALVE PAGE 41~45
4	ANGLE PNEUMATIC VALVE PAGE 61~66

SOLENOID VALVE

UF SERIES UPVC SOLENOID VALVE



Features

1.Body Material: UPVC
2.Seal Material: AFLAS
3.Isolation structure design, keep the medium separade with the valve body and seals
4.Piston constructure, longer lifetime
5.Soft seal design, no leakage

Specifications

Code		UF-15	UF-20	UF-25
Orifice(mm)		16	19.5	24
Connection		G1/2"	G3/4"	G1"
Working Pressure		0.01~0.6MPa		
PIN		1.0MPa		
Body Material		UPVC		
Seal Material		AFLAS		
Medium		Weak acid and alkali(Air, Liquid)		
Media Temperature		MAX. +80℃		
Ambient Temperature		0~60℃		
Power	AC220V	17	17	17
	DC220V	17	17	17
Weight KG		0.80	0.82	0.85

Drawings

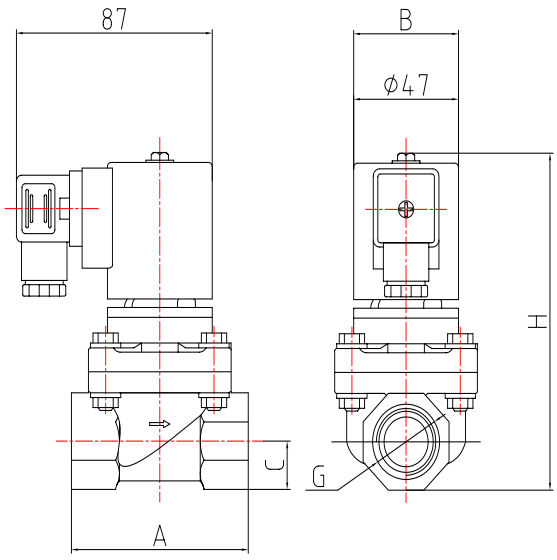

Model	G	A	B	C	H
UF-15	G1/2"	75	63.5	16	127
UF-20	G3/4"	80	63.5	19	133
UF-25	G1"	124	74	24	143

☎+86 574 82823826 | Fax +86 574 87157907 | sales@xhnotion.com | Web: www.xhnotion.com

SOLENOID VALVE

8mm HIGH PRESSURE SOLENOID VALVE



Components





Specifications

Model	PG-08 PG-10 PG-15
Port Size	G1/4", G3/8", G1/2
Body Material	Brass, Stainless steel
Seal Ring Material	NBR, PUR, PTFE
Max Media Temperature	80℃
Voltage Available	DC 12V; DC 24V
	12VAC;24VAC;110/120VAC; 220/230VAC
Inner Orifice	8MM, 10MM
Work Pressure	0.5-150 bar

Features

1. Compact volume
2. 8mm large orifice
3. Max pressure 150 bar
4. Piston structure
5. Regular thread：1/4". 3/8", 1/2"
6. Conforming to CE certificate.

Drawings

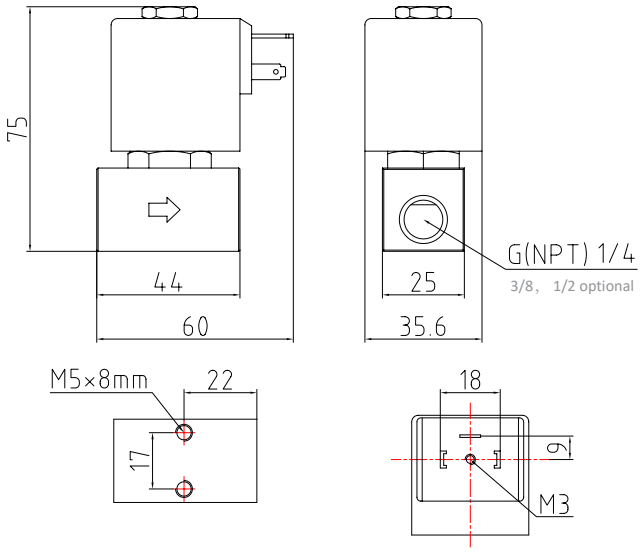

SOLENOID VALVE

2N SERIES COMPACT SOLENOID VALVE

How to Order

2N	150	—	15	B	H	V

Model

2 way direct acting valve
2N
XP
2WP
2W
XLA
XLH

Orifice

025: 2.5mm
040: 4mm
100: 10mm
150: 15mm
160: 16mm
200: 20mm
250: 25mm
320: 32mm
350: 35mm
400: 40mm
500: 50mm

Port Size

06: 1/8”
08: 1/4”
10: 3/8”
15: 1/2”
20: 3/4”
25: 1”
35: 1-1/4”
40: 1-1/2”
50: 2”

Material

Blank: Brass
B: Stainless steel
F: Flange

Acting Way

Blank: Normally closed
H: Normally open

Sealing

Blank: NBR
V: Viton
E: EPDM
S: Silicone
P: PTFE

Regular voltage : 220VAC, 110VAC, 24VDC, 12VDC, Other voltages are also customerized as requested

Structure & Material

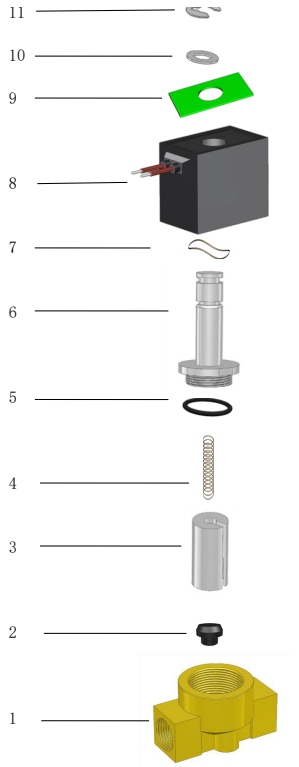

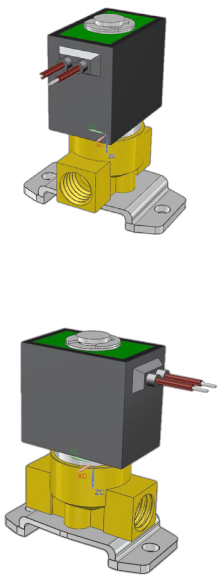

Series	Parts	Material
1	Body	Brass
2	Seals	NBR/EPDM/FKM
3	Pluger	430F
4	Spring	SUS304
5	O-ring	NBR/EPDM/FKM
6	Tube	430F
7	Washer	Spring steel
8	Coil	Copper
9	Plate	Aluminum
10	Washer	SUS304
11	Clip	Spring steel

☎+86 574 82823826 | Fax +86 574 87157907 | sales@xhnotion.com | Web: www.xhnotion.com



NORMALLY CLOSED



NORMALLY OPEN

Specification for 2N Series Miniature Nomally Closed Solenoid Valve

Model		Pipe	Orifice	CV value	Max Work Pressure(bar)						Coil	Power			Weight (KG)
					AC			DC				AC(50Hz)		DC	
Brass	Stainless steel				Air	Water	Oil	Air	Water	Oil		VA	W	W	
2N010-06	2N010-06B	1/8"	1	0.04	50	50	40	50	50	40	W11011 D11011	9	4.5	8	0.27
2N010-08	2N010-08B	1/4"	1	0.04	50	50	40	50	50	40					
2N015-06	2N015-06B	1/8"	1.5	0.1	25	25	20	25	25	20					
2N015-08	2N015-08B	1/4"	1.5	0.1	25	25	20	25	25	20					
2N020-06	2N020-06B	1/8"	2	0.15	15	15	13	15	15	13					
2N020-08	2N020-08B	1/4"	2	0.15	15	15	13	15	15	13					
2N025-06	2N025-06B	1/8"	2.5	0.23	10	10	7	10	10	7					
2N025-08	2N025-08B	1/4"	2.5	0.23	10	10	7	10	10	7					
2N030-06	2N030-06B	1/8"	3	0.3	7	7	5	7	7	5					
2N030-08	2N030-08B	1/4"	3	0.3	7	7	5	7	7	5					
2N040-08	2N040-08B	1/4"	4	0.58	4	4	3	4	4	3					
2N050-08	2N050-08B	1/4"	5	0.65	2	2	1.5	2	2	1.5					
2N060-08	2N060-08B	1/4"	6	0.8	1	1	0.7	1	1	0.7					
2N030-08	2N030-08B	1/4"	3	0.3	16	16	13	13	13	10	D14511	20	12	12	0.33
2N040-08	2N040-08B	1/4"	4	0.58	10	10	7	7	7	5					
2N050-08	2N050-08B	1/4"	5	0.65	5	5	4	3	3	2					
2N060-08	2N060-08B	1/4"	6	0.8	3	3	2	1.5	1.5	1					
2N030-10	2N030-10B	3/8"	3	0.3	20	20	15	20	20	15	D16011	19	11	18	0.47
2N030-15	2N030-15B	1/2"	3	0.3	20	20	15	20	20	15					
2N040-10	2N040-10B	3/8"	4	0.58	10	10	7	10	10	7					
2N040-15	2N040-15B	1/2"	4	0.58	10	10	7	10	10	7					
2N050-10	2N050-10B	3/8"	5	0.65	7	7	5	5	5	3					
2N050-15	2N050-15B	1/2"	5	0.65	7	7	5	5	5	3					
2N060-10	2N060-10B	3/8"	6	0.8	5	5	3	3	3	2					
2N060-15	2N060-15B	1/2"	6	0.8	5	5	3	3	3	2					
2N080-10	2N080-10B	3/8"	8	0.97	2	2	1.5	1.5	1.5	1					
2N080-15	2N080-15B	1/2"	8	0.97	2	2	1.5	1.5	1.5	1					
2N100-15	2N100-15B	1/2"	10	1.8	1	1	0.5	0.5	0.5	0.2	D16011	19	11	18	0.53

Specification for 2N Series Miniature Normally Open Solenoid Valve

Model		Pipe	Orifice	CV value	Max Work Pressure(bar)						Coil	Power			Weight (KG)
					AC			DC				AC(50Hz)		DC	
Brass	Stainless steel				Air	Water	Oil	Air	Water	Oil		VA	W	W	
2N010-06H	2N010-06BH	1/8"	1	0.04	40	40	35	40	40	35	W11011 D11011	9	4.5	8	0.3
2N010-08H	2N010-08BH	1/4"	1	0.04	40	40	35	40	40	35					
2N015-06H	2N015-06BH	1/8"	1.5	0.1	25	25	20	25	25	20					
2N015-08H	2N015-08BH	1/4"	1.5	0.1	25	25	20	25	25	20					
2N025-06H	2N025-06BH	1/8"	2.5	0.23	10	10	7	10	10	7					
2N025-08H	2N025-08BH	1/4"	2.5	0.23	10	10	7	10	10	7					
2N040-06H	2N040-06BH	1/8"	4	0.58	4	4	3	4	4	3					
2N040-08H	2N040-08BH	1/4"	4	0.58	4	4	3	4	4	3					
2N050-06H	2N050-06BH	1/8"	5	0.65	2	2	1.5	2	2	1.5					
2N050-08H	2N050-08BH	1/4"	5	0.65	2	2	1.5	2	2	1.5					
2N060-06H	2N060-06BH	1/8"	6	0.8	1	1	0.7	1	1	0.7					
2N060-08H	2N060-08BH	1/4"	6	0.8	1	1	0.7	1	1	0.7					
2N025-06H	2N025-06BH	1/8"	2.5	0.23	16	16	13	16	16	13	D14511	20	12	12	0.36
2N025-08H	2N025-08BH	1/4"	2.5	0.23	16	16	13	16	16	13					
2N030-06H	2N030-06BH	1/8"	3	0.3	10	10	7	10	10	7					
2N030-08H	2N030-08BH	1/4"	3	0.3	10	10	7	10	10	7					
2N040-08H	2N040-08BH	1/4"	4	0.58	7	7	5	7	7	5	D16011	19	11	18	0.43
2N050-08H	2N050-08BH	1/4"	5	0.65	5	5	3	5	5	3					
2N060-08H	2N060-08BH	1/4"	6	0.8	3	3	2	3	3	2					
2N030-10H	2N030-10BH	3/8"	3	0.3	10	10	7	10	10	7	D16011	19	11	18	0.55
2N030-15H	2N030-15BH	1/2"	3	0.3	10	10	7	10	10	7					
2N040-10H	2N040-10BH	3/8"	4	0.58	7	7	5	7	7	5					
2N040-15H	2N040-15BH	1/2"	4	0.58	7	7	5	7	7	5					
2N050-10H	2N050-10BH	3/8"	5	0.65	5	5	3	5	5	3					
2N050-15H	2N050-15BH	1/2"	5	0.65	5	5	3	5	5	3					
2N060-10H	2N060-10BH	3/8"	6	0.8	3	3	2	3	3	2					
2N060-15H	2N060-15BH	1/2"	6	0.8	3	3	2	3	3	2					
2N080-10H	2N080-10BH	3/8"	8	0.97	1	1	0.7	1	1	0.7					
2N080-15H	2N080-15BH	1/2"	8	0.97	1	1	0.7	1	1	0.7					
2N100-15H	2N100-15BH	1/2"	10	1.8	0.5	0.5	0.2	0.5	0.5	0.2	D16011	19	11	18	0.57

Drawing

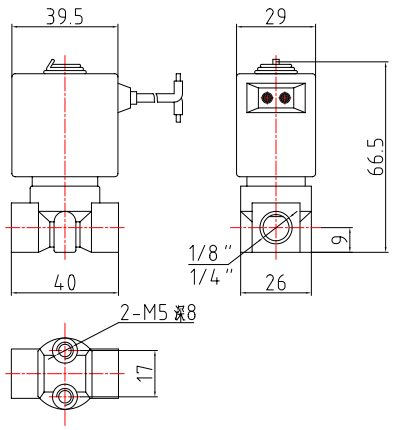

NC - W11011 - 1/8 1/4

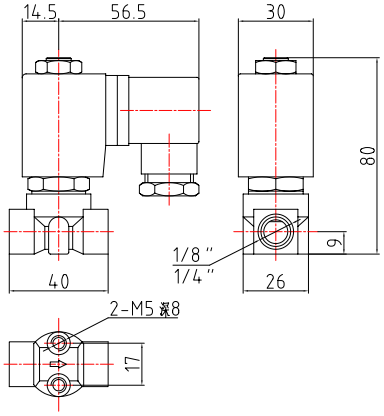

NC - D14511 - 1/8 1/4

☎+86 574 82823826 | Fax +86 574 87157907 | sales@xhnotion.com | Web: www.xhnotion.com

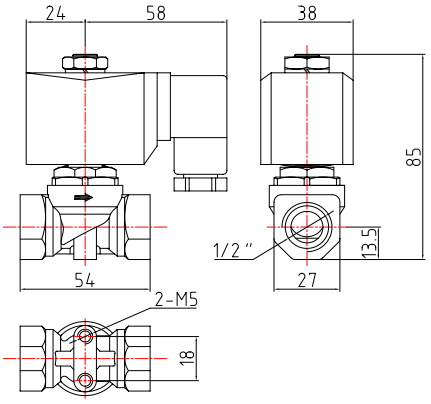

NC - D16011 - 3/8 1/2

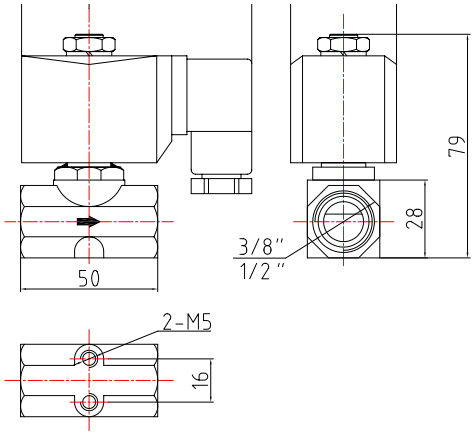

NC - D16011 - 1/2

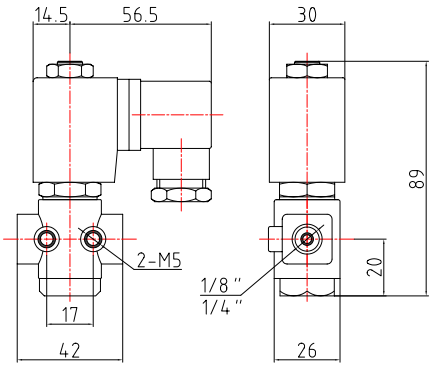

NO- D14511 - 1/8 1/4

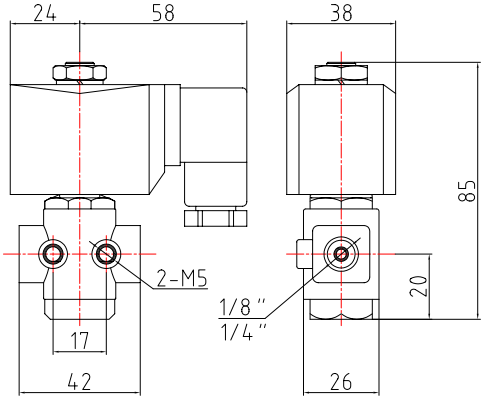

NO - D16011 - 1/8 1/4

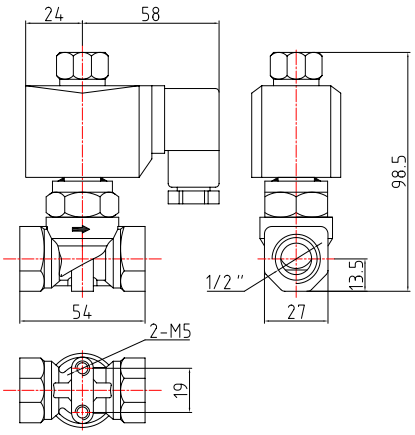

NO - D16011 - 3/8 1/2

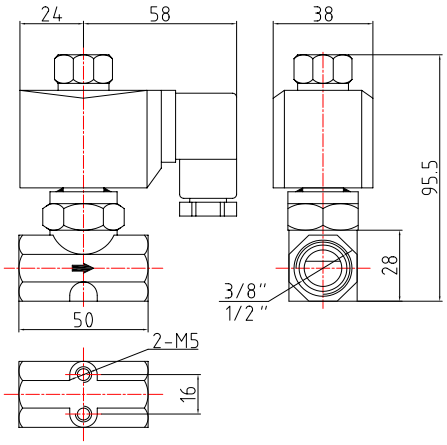

NO- D16011 - 1/2

SOLENOID VALVE

2N SERIES SOLENOID VALVE



Features

1. Compact volume, large flow, widely use
2. Protection class: IP65, dust proof and water proof, can be used for outdoors
3. DIN connector and wire leads are available
4. Insulation grade: H class, good resistance to high temperature
5. NBR, VITON, EPDM, SILICONE seals are available
6. Normally closed and normally open

Symbol

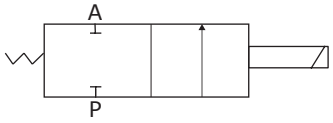

* Warning: Make sure the system is clean before installing please fix a filter in the front of solenoid valve for long life.

How to Order

2N	150	—	15	B	H	V

Model

2 way direct acting valve
2N
XP
2WP
2W
XLA
XLH

Orifice

025: 2.5mm
040: 4mm
100: 10mm
150: 15mm
160: 16mm
200: 20mm
250: 25mm
320: 32mm
350: 35mm
400: 40mm
500: 50mm

Port Size

06: 1/8”
08: 1/4”
10: 3/8”
15: 1/2”
20: 3/4”
25: 1”
35: 1-1/4”
40: 1-1/2”
50: 2”

Material

Blank: Brass
B: Stainless steel
F: Flange

Acting Way

Blank: Normally closed
H: Normally open

Sealing

Blank: NBR
V: Viton
E: EPDM
S: Silicone
P: PTFE

Regular voltage : 220VAC, 110VAC, 24VDC, 12VDC, Other voltages are also customerized as requested

☎+86 574 82823826 | Fax +86 574 87157907 | sales@xhnotion.com | Web: www.xhnotion.com

2N Series Compact Solenoid Valve





Model		Thread Size (G)	Orifice (mm)	CV	Working Pressure (Bar)						Body Material	Seals	Voltage
					AC			DC					
					air, gas	water	≤20cst oil	air, gas	water	≤20cst oil			
2N100-08	2N100-08B	1/4"	10	1.9	0-20	0-20	0-20	0-16	0-16	0-16	Brass SS304	NBR EPDM VITON	220VAC 110VAC 24VDC
2N100-10	2N100-10B	3/8"	10	1.9	0-20	0-20	0-20	0-16	0-16	0-16			
2N100-15	2N100-15B	1/2"	10	1.9	0-20	0-20	0-20	0-16	0-16	0-16			

Drawing

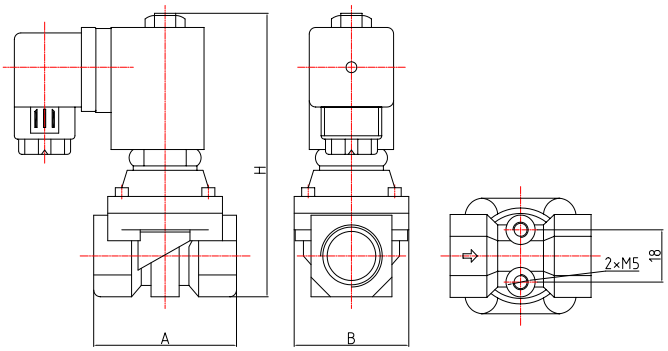

Model		A	B	H
2N100-08	2N100-08B	50	40.5	98
2N100-10	2N100-10B	50	40.5	98
2N100-15	2N100-15B	50	40.5	98

Specification for 2N Series Normally Closed Solenoid Valve

Model		Pipe	Orifice	CV value	Max Work Pressure(bar)						Coil	Power			Weight (KG)
					AC			DC				AC(50Hz)		DC	
Brass	Stainless steel				Air	Water	Oil	Air	Water	Oil		VA	W	W	
2N150-10	2N150-10B	3/8"	15	4.6	10	10	7	7	7	5	D16011	19	11	18	0.67
2N150-15	2N150-15B	1/2"	15	4.6	10	10	7	7	7	5					0.64
2N200-20	2N200-20B	3/4"	20	8.5	10	10	7	7	7	5					0.75
2N250-25	2N250-25B	1"	25	12	10	10	7	7	7	5					1.13
2N350-35	2N350-35B	5/4"	35	26	10	10	7	5	5	3	D16021	39	24	25	2.3
2N350-40	2N350-40B	6/4"	35	26	10	10	7	5	5	3					2.2
2N500-50	2N500-50B	2"	50	48	10	10	7	5	5	3					3.2

Specification for 2N Series Normally Open Solenoid Valve

Model		Pipe	Orifice	CV value	Max Work Pressure(bar)						Coil	Power			Weight (KG)
					AC			DC				AC(50Hz)		DC	
Brass	Stainless steel				Air	Water	Oil	Air	Water	Oil		VA	W	W	
2N150-10H	2N150-10BH	3/8"	15	4.6	7	7	5	7	7	5	D16011	19	11	18	0.75
2N150-15H	2N150-15BH	1/2"	15	4.6	7	7	5	7	7	5					0.72
2N200-20H	2N200-20BH	3/4"	20	8.5	7	7	5	7	7	5					0.83
2N250-25H	2N250-25BH	1"	25	12	7	7	5	7	7	5					1.21
2N350-35H	2N350-35BH	5/4"	35	26	5	5	3	5	5	3	D20011	28	18	30	3.1
2N350-40H	2N350-40BH	6/4"	35	26	5	5	3	5	5	3					3.0
2N500-50H	2N500-50BH	2"	50	48	5	5	3	5	5	3					4.0

Overall Dimensions

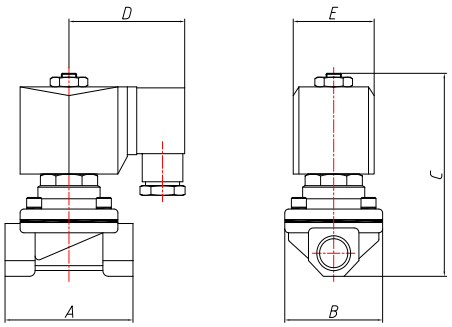

Normally Closed

Model	A	B	C	D	E
2N150-10	65	47	93	59.5	38
2N150-15	65	47	93	59.5	38
2N200-20	72	54	100	59.5	38
2N250-25	90	70	108	59.5	38
2N350-35	120	90	131	64.5	48
2N350-40	120	90	131	64.5	48
2N500-50	150	112	146	64.5	48

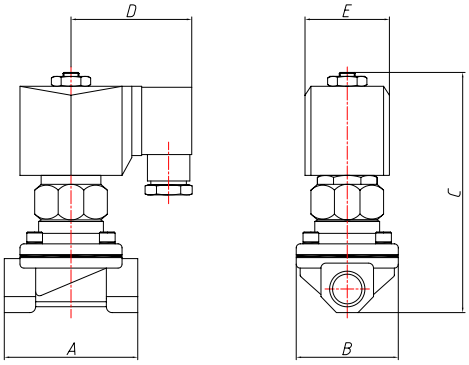

Normally Open

Model	A	B	C	D	E
2N150-10H	65	47	116	59.5	38
2N150-15H	65	47	116	59.5	38
2N200-20H	72	54	123	59.5	38
2N250-25H	90	70	131	59.5	38
2N350-35H	120	90	175	64.5	48
2N350-40H	120	90	175	64.5	48
2N500-50H	150	112	190	64.5	48

☎+86 574 82823826 | Fax +86 574 87157907 | sales@xhnotion.com | Web: www.xhnotion.com

Structure & Material

* The specification is just for reference. We also customize a lot of other models.

Pressure, temperature, seal material, body material can be changed to reach some requirements.

If you have special requirements, we will offer you some solutions

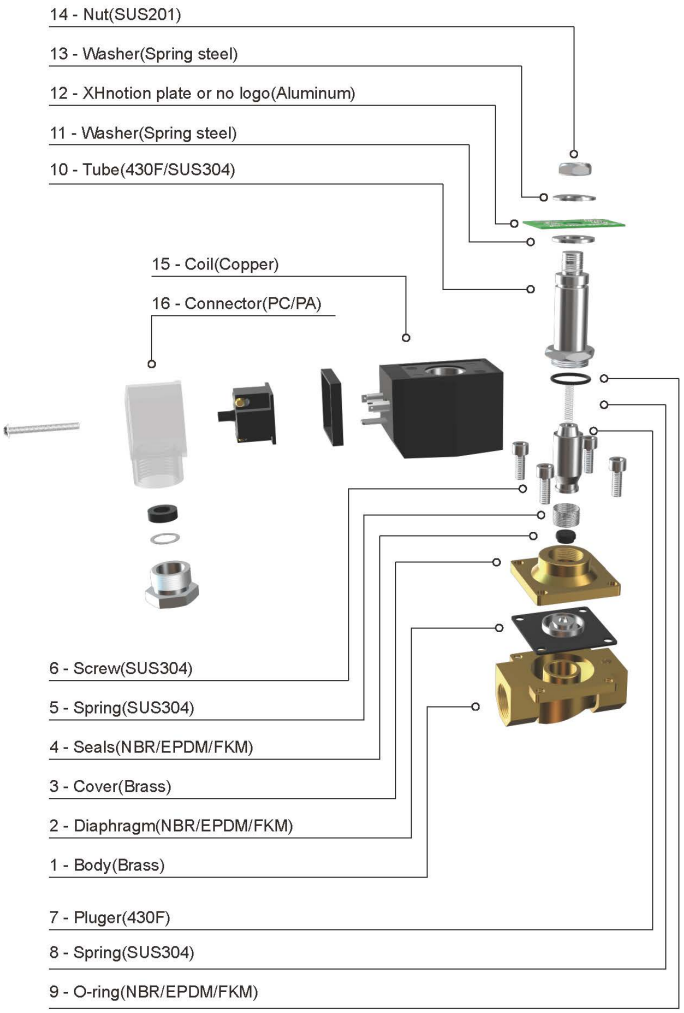

FLOW CHART

2N-10 2N-15 2N-20 2N-25
2N-35 2N-40 2N-50

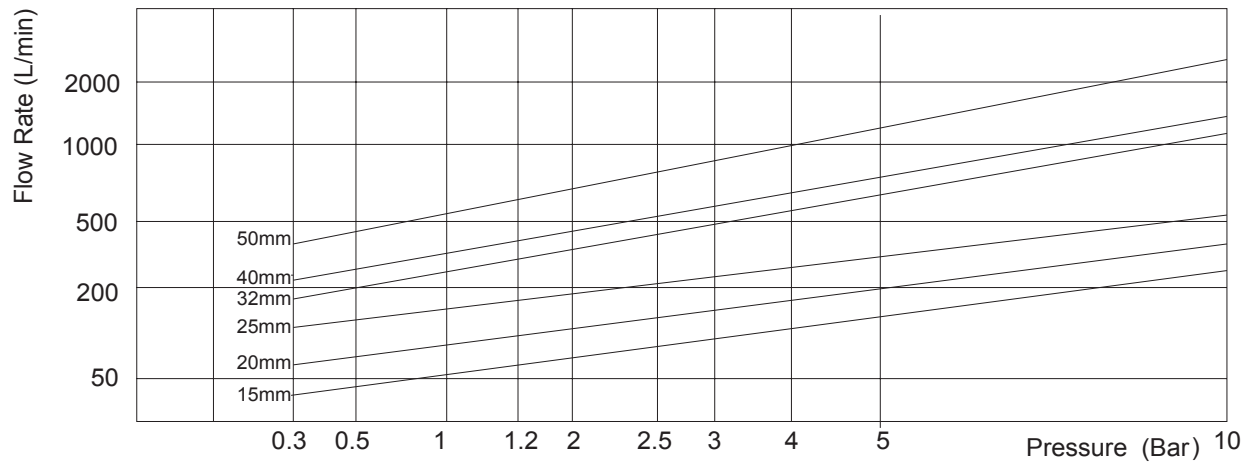

SOLENOID VALVE

2W SERIES SOLENOID VALVE



Features

1. Compact volume, large flow, widely use
2. Steel shell, good heat dissipation
3. IP54, low cost.
4. Body material: brass, stainless steel
5. NBR, VITON, EPDM, SILICONE seals are available
6. Normally closed and normally open

Symbol

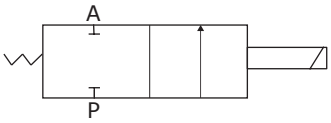

* Warning: Make sure the system is clean before installing please fix a filter in the front of solenoid valve for long life.

Specification for 2W Series Normally Closed Solenoid Valve

Model	2W025-06	2W025-08	2W040-10	2W160-10	2W160-15	2W200-20	2W250-25	2W350-35	2W400-40	2W500-50
	2W025-06B	2W025-08B	2W040-10B	2W160-10B	2W160-15B	2W200-20B	2W250-25B	2W350-35B	2W400-40B	2W500-50B
Working Type	Normally Closed									
Medium	Air, Water, Light Oil, Gas									
Acting Motion	Direct Acting									
Orifice(mm)	2.5mm		4mm	16mm		20mm	25mm	35mm	40mm	50mm
CV Value	0.23		0.6	4.8		7.6	12	24	29	48
Pipe Size	1/8"	1/4"	3/8"	3/8"	1/2"	3/4"	1"	1-1/4"	1-1/2"	2"
Working Pressure	Water, Air 0-120 Psi, Oil 0-70 Psi									
Working Temperature	-5-80 ℃									
Viscosity	Under 20CST									
Seal Material	NBR, EDPM, VITON									
Body Material	Brass, Stainless steel									
Voltage	220VAC, 110VAC, 24VDC, 12VDC									

☎+86 574 82823826 | Fax +86 574 87157907 | sales@xhnotion.com | Web: www.xhnotion.com

Specification for 2W Series Normally Open Solenoid Valve

Model	2W025-06H / 2W025-06BH	2W025-08H / 2W025-08BH	2W040-10H / 2W040-10BH	2W160-10H / 2W160-10BH	2W160-15H / 2W160-15BH	2W200-20H / 2W200-20BH	2W250-25H / 2W250-25BH	2W350-35H / 2W350-35BH	2W400-40H / 2W400-40BH	2W500-50H / 2W500-50BH
Working Type	Normally Open									
Medium	Air,Water,Light Oil,Gas									
Acting Motion	Direct Acting									
Orifice(mm)	2.5mm		4mm	16mm		20mm	25mm	35mm	40mm	50mm
CV Value	0.23		0.6	4.8		7.6	12	24	29	48
Pipe Size	1/8"	1/4"	3/8"	3/8"	1/2"	3/4"	1"	1-1/4"	1-1/2"	2"
Working Pressure	Water,Air 0-70 Psi,Oil 0-40 Psi									
Working Temperature	-5-80 ℃									
Viscosity	Under 20CST									
Seal Material	NBR, EDPM, VITON									
Body Material	Brass, Stainless steel									
Voltage	220VAC, 110VAC, 24VDC, 12VDC									

Overall Dimensions

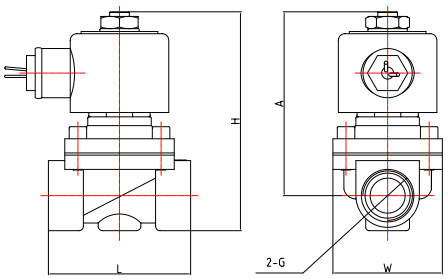

Model	L	W	H		Model	L	W	H
2W025-06	40.5	30	75		2W025-06B	41	30	75
2W025-08	40.5	30	75		2W025-08B	41	30	75
2W040-10	52.5	32	85		2W040-10B	53	32	85
2W160-10	69	57	117		2W160-10B	69	57	117
2W160-15	69	57	117		2W160-15B	69	57	117
2W200-20	73	57	123.5		2W200-20B	73	57	123.5
2W250-25	99	73.5	135		2W250-25B	99	73.5	134.5
2W350-35	123	95	172		2W350-35B	123	95	172
2W400-40	123	95	172		2W400-40B	123	95	172
2W500-50	168	123	209		2W500-50B	168	123	209
					2W250-25FB	135		160
					2W320-35FB	152		212
					2W400-40FB	152		215
					2W500-50FB	200		252

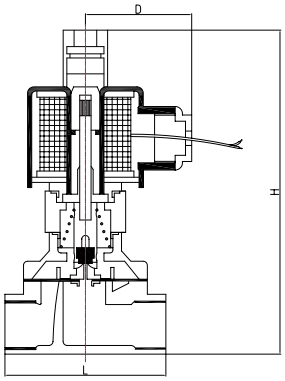

Model	L	H		Model	L	H
2W025-06H	40.5	110		2W025-06BH	40.5	110
2W025-08H	40.5	110		2W025-08BH	40.5	110
2W040-10H	52.5	115		2W040-10BH	52.5	115
2W160-10H	69	135		2W160-10BH	69	135
2W160-15H	69	135		2W160-15BH	69	135
2W200-20H	73	142		2W200-20BH	73	142
2W250-25H	99	150		2W250-25BH	99	150
2W350-35H	123	186		2W350-35BH	123	186
2W400-40H	123	197		2W400-40BH	123	197
2W500-50H	168	225		2W500-50BH	168	225
				2W250-25FBH	135	160
				2W320-35FBH	152	230
				2W400-40FBH	152	240
				2W500-50FBH	200	270

SOLENOID VALVE

XP SERIES SOLENOID VALVE



Features

1. Compact volume, large flow, widely use
2. Pilot operated structure
3. Lower power consumption, bigger working pressure
4. Body material: brass, stainless steel
5. NBR, VITON, EPDM, SILICONE seals are available
6. Normally closed and normally open

Symbol

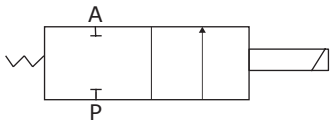

* Warning: Make sure the system is clean before installing please fix a filter in the front of solenoid valve for long life.

Specification for XP Series Normally Closed Solenoid Valve

Model		Pipe	Orifice	CV value	MIN Pressure (bar)	Max Work Pressure(bar)						Coil	Power			Weight (KG)
						AC			DC				AC(50Hz)		DC	
Brass	Stainless steel					Air	Water	Oil	Air	Water	Oil		VA	W	W	
XP150-10	XP150-10B	3/8"	15	4.6	0.5	10	10	7	10	10	7	W11011 D11011	9	4.5	8	0.62
XP150-15	XP150-15B	1/2"	15	4.6	0.5	10	10	7	10	10	7					0.58
XP200-20	XP200-20B	3/4"	20	8.5	0.5	10	10	7	10	10	7					0.77
XP250-25	XP250-25B	1"	25	12	0.5	10	10	7	10	10	7					1.09
XP350-35	XP350-35B	5/4"	35	26	0.5	7	7	5	7	7	5					2.17
XP350-40	XP350-40B	6/4"	35	26	0.5	7	7	5	7	7	5					2.01
XP500-50	XP500-50B	2"	50	48	0.5	7	7	5	7	7	5					3.04
XP150-10	XP150-10B	3/8"	15	4.6	0.5	16	16	13	16	16	13	D14511	20	12	12	0.68
XP150-15	XP150-15B	1/2"	15	4.6	0.5	16	16	13	16	16	13					0.64
XP200-20	XP200-20B	3/4"	20	8.5	0.5	16	16	13	16	16	13					0.81
XP250-25	XP250-25B	1"	25	12	0.5	16	16	13	16	16	13					1.15
XP350-35	XP350-35B	5/4"	35	26	0.5	16	16	13	16	16	13					2.20
XP350-40	XP350-40B	6/4"	35	26	0.5	16	16	13	16	16	13					2.07
XP500-50	XP500-50B	2"	50	48	0.5	16	16	13	16	16	13					3.10

☎+86 574 82823826 | Fax +86 574 87157907 | sales@xhnotion.com | Web: www.xhnotion.com

Specification for XP Series Normally Open Solenoid Valve

Model		Pipe	Orifice	CV value	MIN Pressure (bar)	Max Work Pressure(bar)						Coil	Power			Weight (KG)
						AC			DC				AC(50Hz)		DC	
Brass	Stainless steel					Air	Water	Oil	Air	Water	Oil		VA	W	W	
XP150-10H	XP150-10BH	3/8"	15	4.6	0.5	16	16	13	16	16	13	D16011	19	11	18	0.83
XP150-15H	XP150-15BH	1/2"	15	4.6	0.5	16	16	13	16	16	13					0.79
XP200-20H	XP200-20BH	3/4"	20	8.5	0.5	16	16	13	16	16	13					0.96
XP250-25H	XP250-25BH	1"	25	12	0.5	16	16	13	16	16	13					1.30
XP350-35H	XP350-35BH	5/4"	35	26	0.5	16	16	13	16	16	13					2.35
XP350-40H	XP350-40BH	6/4"	35	26	0.5	16	16	13	16	16	13					2.22
XP500-50H	XP500-50BH	2"	50	48	0.5	16	16	13	16	16	13					3.25

Overall Dimensions

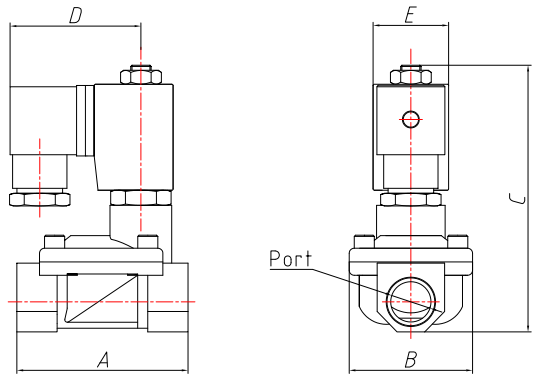

Normally Closed

Model	A	B	C	D	E
XP150-10	68	49	107	52	30
XP150-15	68	49	107	52	30
XP200-20	76	57	114	52	30
XP250-25	96	70	122	52	30
XP350-35	120	90	141	52	30
XP350-40	120	90	141	52	30
XP500-50	150	112	158	52	30

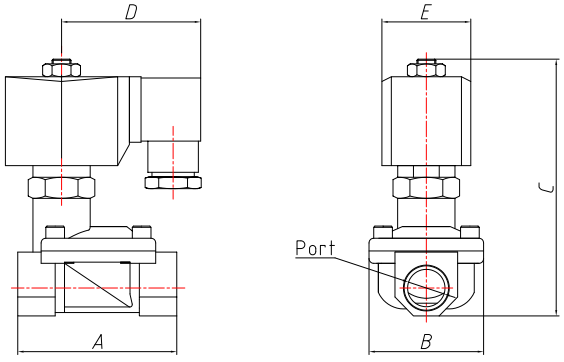

Normally Open

Model	A	B	C	D	E
XP150-10H	68	49	118	59.5	38
XP150-15H	68	49	118	59.5	38
XP200-20H	76	57	125	59.5	38
XP250-25H	96	70	133	59.5	38
XP350-35H	120	90	152	59.5	38
XP350-40H	120	90	152	59.5	38
XP500-50H	150	112	169	59.5	38

Structure & Material

* The specification is just for reference. We also customize a lot of other models.

Pressure, temperature, seal material, body material can be changed as you request.

If you have special requirements, we will offer you some solutions.

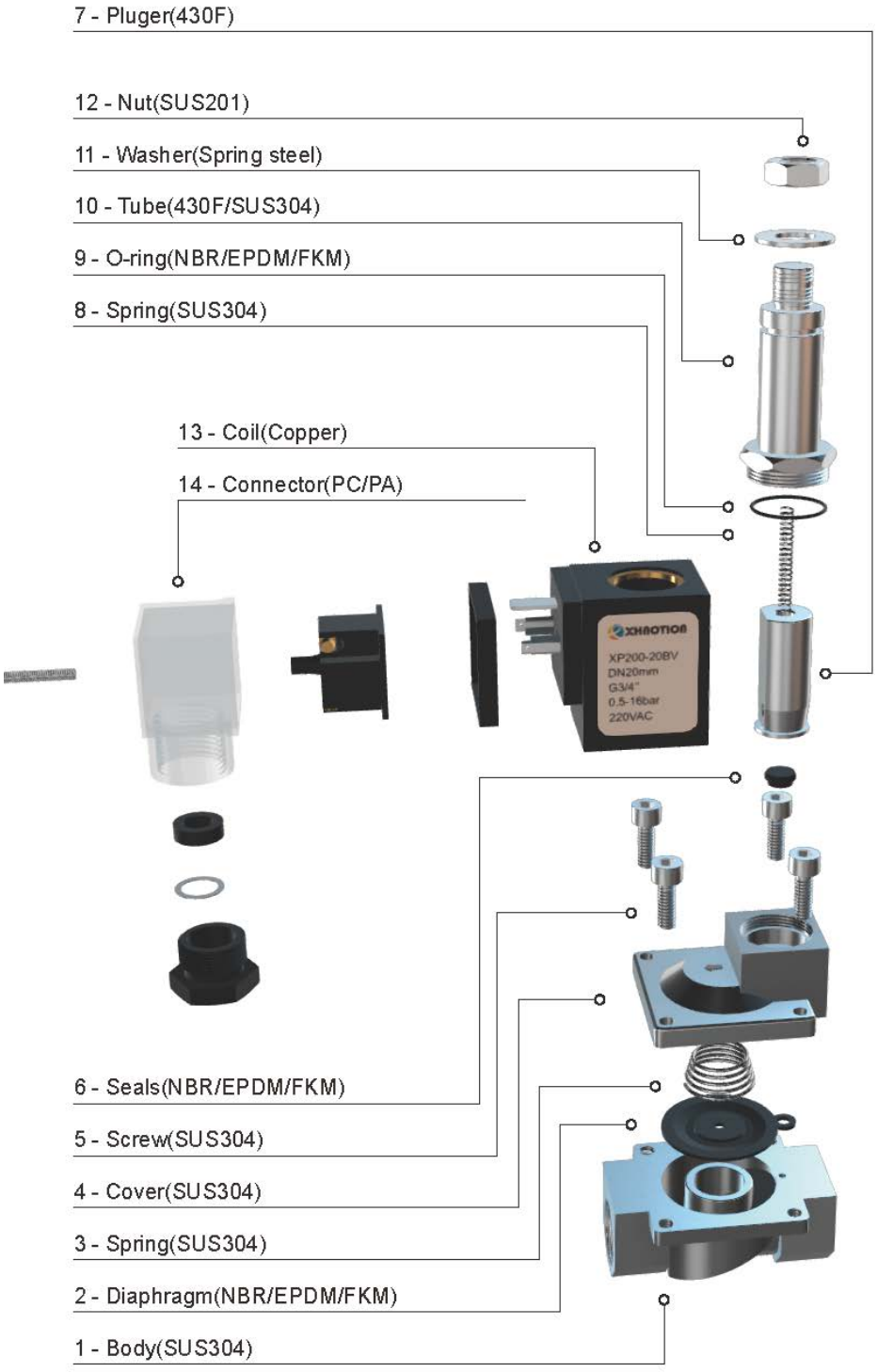

☎+86 574 82823826 | Fax +86 574 87157907 | sales@xhnotion.com | Web: www.xhnotion.com

How to Order

XP | 150 — 15 | B | M | V

Model

2 way direct acting valve
2N
XP
2WP
2W
XLA
XLH

Orifice

025: 2.5mm
040: 4mm
100: 10mm
150: 15mm
160: 16mm
200: 20mm
250: 25mm
320: 32mm
350: 35mm
400: 40mm
500: 50mm

Port Size

06: 1/8”
08: 1/4”
10: 3/8”
15: 1/2”
20: 3/4”
25: 1”
35: 1-1/4”
40: 1-1/2”
50: 2”

Material

Blank: Brass
B: Stainless steel
F: Flange

Acting Way

M: magnet Bi-Stable

Sealing

Blank: NBR
V: Viton
E: EPDM
S: Silicone
P: PTFE

Regular voltage : 220VAC, 110VAC, 24VDC, 12VDC, Other voltages are also customerized as requested

XP Bi-stable Solenoid Valve

Model		Pipe	Orifice	CV value	MIN Pressure (bar)	Max Work Pressure(bar)			Coil	Power			Weight (KG)
										AC(50Hz)		DC	
Brass	Stailess steel					Air	Water	Oil		VA	W	W	
XP100-10M	XP100-10BM	3/8"	10	4.6	0.5	10	10	7	W11011 D11011	9	4.5	8	0.62
XP150-15M	XP150-15BM	1/2"	15	4.6	0.5	10	10	7					0.58
XP200-20M	XP200-20BM	3/4"	20	8.5	0.5	10	10	7					0.77
XP250-25M	XP250-25BM	1"	25	12	0.5	10	10	7					1.09
XP350-35M	XP350-35BM	5/4"	35	26	0.5	7	7	5					2.17
XP350-40M	XP350-40BM	6/4"	35	26	0.5	7	7	5					2.01
XP500-50M	XP500-50BM	2"	50	48	0.5	7	7	5					3.04

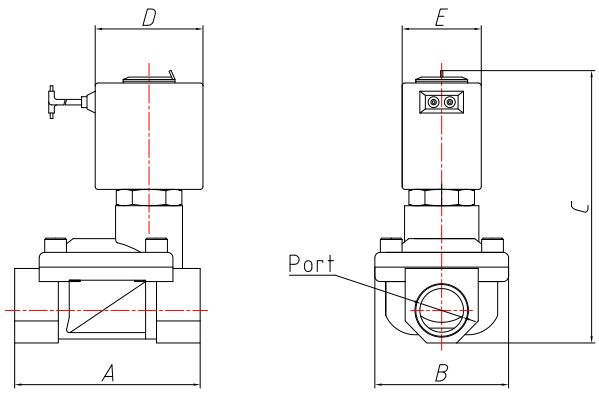

Overall Dimensions

Model	A	B	C
XP100-10M	68	49	92
XP150-15M	68	49	92
XP200-20M	76	57	99
XP250-25M	96	70	107
XP350-35M	120	90	126
XP350-40M	120	90	126
XP500-50	150	112	143

SOLENOID VALVE

BI-STABLE SOLENOID VALVE

Bi-stable solenoid valve is also named latching solenoid valve. It includes a set of permanent magnets that allow the solenoid to offer hold force even after the power is off.





2N Bi-stable Solenoid Valve

Model		Pipe	Orifice	CV value	MIN Pressure (bar)	Max Work Pressure(bar)			Coil	Power			Weight (KG)
										AC(50Hz)		DC	
Brass	Stailess steel					Air	Water	Oil		VA	W	W	
2N010-06M	2N010-06BM	1/8"	1	0.04	0	50	50	50	W11011 D11011	9	4.5	8	0.27
2N010-08M	2N010-08BM	1/4"	1	0.04	0	50	50	50					
2N015-06M	2N015-06BM	1/8"	1.5	0.1	0	25	25	25					
2N015-08M	2N015-08BM	1/4"	1.5	0.1	0	25	25	25					
2N020-06M	2N020-06BM	1/8"	2	0.15	0	15	15	15					
2N020-08M	2N020-08BM	1/4"	2	0.15	0	15	15	15					
2N025-06M	2N025-06BM	1/8"	2.5	0.23	0	7	7	5					
2N025-08M	2N025-08BM	1/4"	2.5	0.23	0	7	7	5					
2N030-06M	2N030-06BM	1/8"	3	0.3	0	5	5	3					
2N030-08M	2N030-08BM	1/4"	3	0.3	0	5	5	3					
2N040-06M	2N040-06BM	1/8"	4	0.58	0	2	2	1					
2N040-08M	2N040-08BM	1/4"	4	0.58	0	2	2	1					
2N050-06M	2N050-06BM	1/8"	5	0.65	0	1	1	0.5					
2N050-08M	2N050-08BM	1/4"	5	0.65	0	1	1	0.5					
2N060-06M	2N060-06BM	1/8"	6	0.8	0	0.5	0.5	0.3					
2N060-08M	2N060-08BM	1/4"	6	0.8	0	0.5	0.5	0.3					

Overall Dimensions

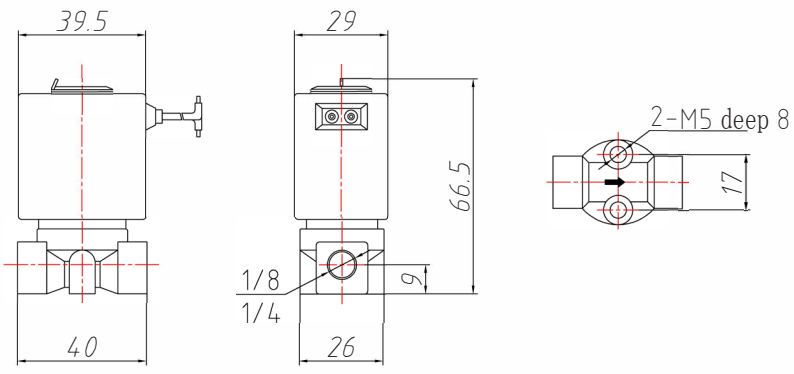

☎+86 574 82823826 | Fax +86 574 87157907 | sales@xhnotion.com | Web: www.xhnotion.com

SOLENOID VALVE

XCMA SERIES GAS SOLENOID VALVE

Features

1. Compact volume, large flow, direct acting
2. Fluid： air
3. Flame resist coil
4. Body material: brass, Aluminum

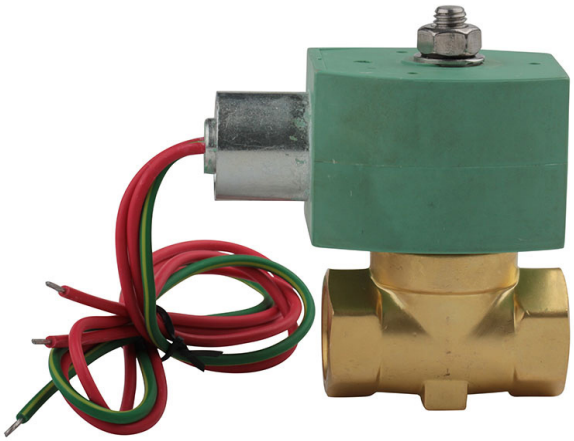

SPECIFICATION

MODEL	XCMA-15
Acting Model	Direct Acting
Use	non-aggressive gases of the three families (dry gases)
Room temperature (TS)	-20 ~ +60 °C (230 Vac with energy saving -20 ~ +85 °C)
Power voltages (see table 3a-3b)	230 VAC 50HZ
Power supply tolerance	-15% ... +10%
Electric wiring	cable gland 50 cm
N° cycles/hours (versions without energy saving)	~ 1800 (time ON 1s - time OFF 1s)
Power	20VA
Maximum operating pressure	200 mbar
Closing and/or opening time	<1S
Protection rating	1P65
Class	H
Valve body material	Brass
Thread	1/2 3/4

DRAWING

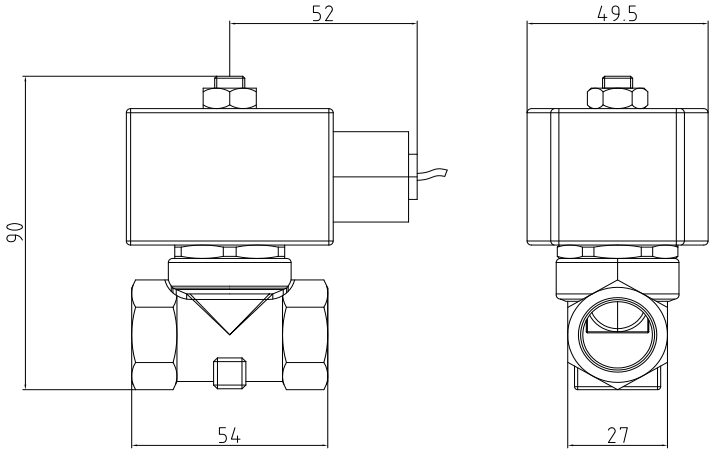

SOLENOID VALVE





1: 2/2-way normally closed, closed when de-energized, open when energized.
2: Working pressure: 0~64kgf/cm^2
3: Ambient temp.: 0~65℃
4: Install: flow as the arrow, mounts in any position; best position is solenoid vertical and upright direction
5: Voltage: AC220V 50HZ DC24V +10%~-10%
6: Seal: Polyurethane
7:Body: Forged Brass /Stainless steel

SPECIFICATION

Model Code	Pipe Size	Orifice (mm)	CV Factor	Operating pressure differential (kgf/cm^2)					Coil Type	Coil Class	Power		Max. Fluids Temp. ℃	Weight (KG)
				Min.	Max.						VA	W		
					Air		Opposite pressure				AC 220V	DC 24V		
					AC	DC	AC	DC						
VAX160-10	3/8"	16	5.5	0	64	64	16	16	A	H	50	50	120	3.5
VAX160-15	1/2"	16	5.5	0	64	64	16	16	A	H	50	50	120	3.45
VAX170-20	3/4"	17	7.5	0	64	64	16	16	A	H	50	50	120	5.3
VAX250-25	1"	25	13	0	64	64	16	16	A	H	50	50	120	7.8

DRAWING

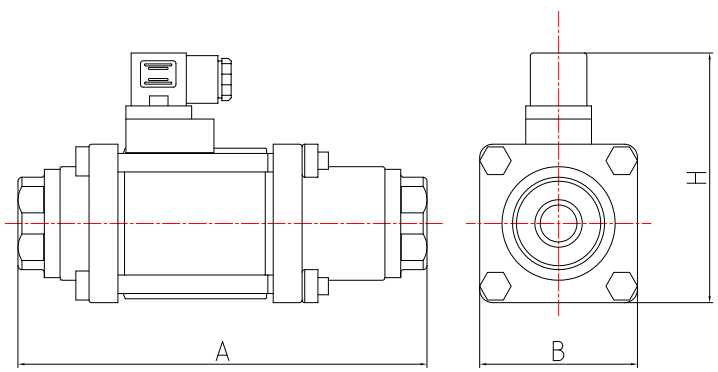

Model Code	G	A	B	H
VAX160-10	3/8"	184	70	112
VAX160-15	1/2"	184	70	112
VAX170-20	3/4"	215	80	122
VAX250-25	1"	246	90	132

☎+86 574 82823826 | Fax +86 574 87157907 | sales@xhnotion.com | Web: www.xhnotion.com





1.Direct acting zero differential pressure, large flow rate
2.2-way normally closed solenoid valve, closed when de-energized, open when energized.
3.Open and closed time: <1 second
4.Material: main valve body material: die-casting aluminium, Others: Stainless steel/Brass
5.Seal material: NBR
6.Medium: coal gas, nature gas, air

SPECIFICATION

Model Code	Connection	Orifice (mm)	CV Factor	Operating Pressure(mbar)		Power Consumption		Coil Type	external size (mm)			N.W. (KG)
						AC	DC					
				Min	Max	VA	W		A	B	H	
GAV090-08	1/4"	9	1.2	0	600	22	13	D	51	35	91	0.3
GAV090-10	3/8"	9	1.4	0	600	22	13	D	51	35	91	0.3
GAV090-15	1/2"	9	1.4	0	600	22	13	D	51	35	91	0.3
GAV190-15		19	7.5	0	360	33	20	A	70	73	122	0.7
GAV190-20	3/4"	19	7.5	0	360	33	20	A	70	73	122	0.7
GAV250-25	1"	25	13	0	360	33	20	A	90	75	127	1.5
GAV450-35	1 1/4"	45	31	0	500	41	34	A	137	122	208	3.0
GAV450-40	1 1/2"	45	31	0	500	41	34	A	137	122	208	3.0
GAV450-50	2"	45	31	0	500	41	34	A	137	122	208	3.0

DRAWING

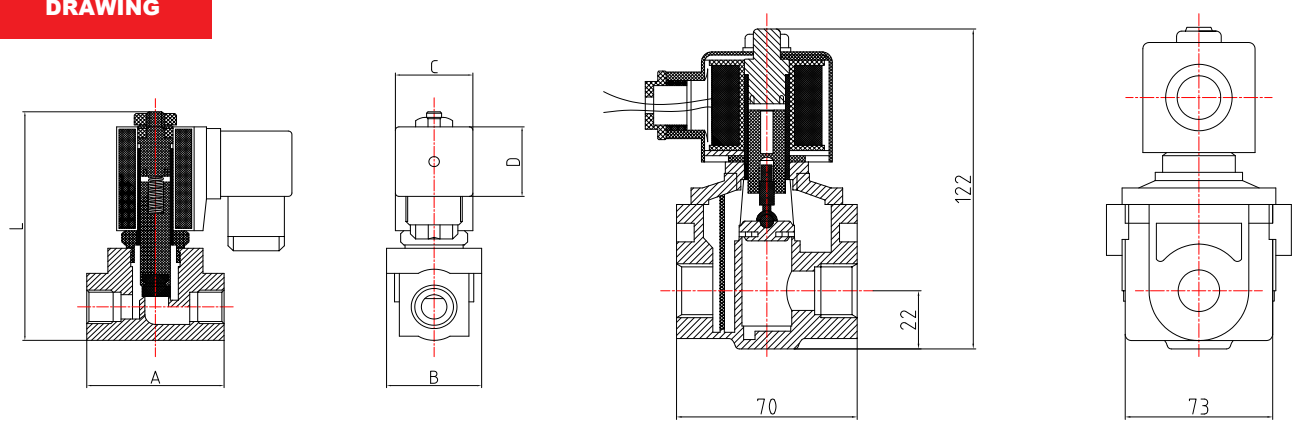

SOLENOID VALVE

XLA SERIES STEAM SOLENOID VALVE



Features

1. Steam solenoid valve.
2. Pilot operated structure, Piston seal.
3. Lower power consumption, bigger working pressure
4. Body material: brass, stainless steel
5. VITON, PTFE seals are available
6. Normally closed and normally open

Symbol

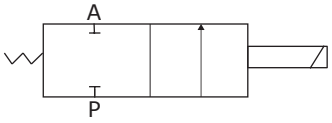

* Warning: Make sure the system is clean before installing please fix a filter in the front of solenoid valve for long life.

Specification for XLA Series Normally Closed Solenoid Valve

Model		Thread Size (G)	Orifice (mm)	CV	Working Pressure (Bar)								Seals	Voltage
					AC				DC					
Brass	Stainless Steel				air, gas	water	light oil	steam	air, gas	water	light oil	steam		
XLA025-06	XLA025-06B	1/8"	2.5	0.23	0-16	0-16	0-13	0-10	0-16	0-16	0-13	0-10	PTFE SEAL ≤180℃ Viton seals ≤150℃;	220VAC 110VAC 24VDC make Other voltage as requested
XLA025-08	XLA025-08B	1/4"	2.5	0.23	0-16	0-16	0-13	0-10	0-16	0-16	0-13	0-10		
XLA040-08	XLA040-08B	1/4"	4	0.6	0-7	0-7	0-4	0-7	0-4	0-4	0-4	0-4		
XLA150-10	XLA150-10B	3/8"	15	4.5	0.5-25	0.5-25	0.5-20	0.5-10	0.5-20	0.5-20	0.5-20	0.5-10		
XLA150-15	XLA150-15B	1/2"	15	4.5										
XLA200-20	XLA200-20B	3/4"	20	9										
XLA250-25	XLA250-25B	1"	25	13										
XLA350-35	XLA350-35B	1 1/4"	35	26										
XLA350-40	XLA350-40B	1 1/2"	35	26										
XLA500-50	XLA500-50B	2"	50	48										
Flange Connection	XLA250-25FB	4 holes flange	25	13										
	XLA350-35FB		35	26										
	XLA350-40FB		35	26										
	XLA500-50FB		45	45										

☎+86 574 82823826 | Fax +86 574 87157907 | sales@xhnotion.com | Web: www.xhnotion.com

Specification for XLA Series Normally Open Solenoid Valve

Model		Thread Size (G)	Orifice (mm)	CV	Working Pressure (Bar)								Seals	Voltage
					AC				DC					
Brass	Stainless Steel				air, gas	water	Light oil	Steam	air, gas	water	Light oil	Steam		
XLA150-10H	XLA150-10BH	3/8"	15	4.5	0.5-10	0.5-10	0.5-10	0.5-10	0.5-10	0.5-10	0.5-10	0.5-10	PTFE SEAL ≤180℃ Viton seals ≤150℃;	220VAC 110VAC 24VDC make Other voltage as requested
XLA150-15H	XLA150-15BH	1/2"	15	4.5										
XLA200-20H	XLA200-20BH	3/4"	20	9										
XLA250-25H	XLA250-25BH	1"	25	13										
XLA350-35H	XLA350-35BH	1 1/4"	35	26	0.5-6	0.5-6	0.5-6	0.5-6	0.5-6	0.5-6	0.5-6	0.5-6		
XLA350-40H	XLA350-40BH	1 1/2"	35	26										
XLA500-50H	XLA500-50BH	2"	50	48										
Flange Connection	XLA250-25FBH	4 holes flange	25	13	0.5-10	0.5-10	0.5-10	0.5-10	0.5-10	0.5-10	0.5-10	0.5-10		
	XLA350-35FBH		35	26	0.5-6	0.5-6	0.5-6	0.5-6	0.5-6	0.5-6	0.5-6	0.5-6		
	XLA350-40FBH		35	26										

Overall Dimensions

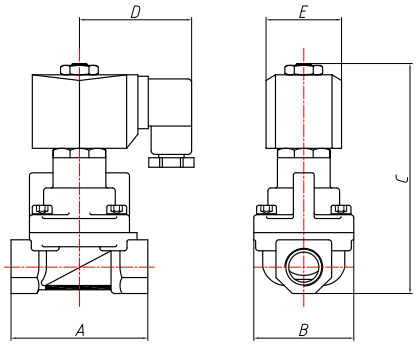

Model No.	A	B	C		Model	A	B	C
XLA025-06	40	28	85		XLA025-06B	40	28	85
XLA025-08	40	28	85		XLA025-08B	40	28	85
XLA040-08	40	28	85		XLA040-08B	40	28	85
XLA150-10	75	52	129		XLA150-10B	75	52	129
XLA150-15	75	52	129		XLA150-15B	75	52	129
XLA200-20	85	60	141		XLA200-20B	85	60	141
XLA250-25	100	70	148		XLA250-25B	100	70	148
XLA350-35	120	90	168		XLA350-35B	120	90	168
XLA350-40	120	90	168		XLA350-40B	120	90	168
XLA500-50	150	110	190		XLA500-50B	150	110	190
XP500-50F	200	160	207		XLA250-25FB	134	110	185
					XLA350-35FB	160	135	200
					XLA350-40FB	160	145	205
					XLA500-50FB	200	155	250

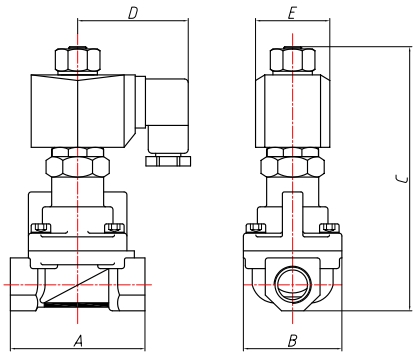

Model No.	A	B	C		Model No.	A	B	C
XLA150-10H	75	52	147		XLA150-10BH	75	52	147
XLA150-15H	75	52	147		XLA150-15BH	75	52	147
XLA200-20H	85	60	159		XLA200-20BH	85	60	159
XLA250-25H	100	70	166		XLA250-25BH	100	70	166
XLA350-35H	120	90	186		XLA350-35BH	120	90	186
XLA350-40H	120	90	186		XLA350-40BH	120	90	186
					XLA250-25FBH	134	110	200
					XLA350-35FBH	160	135	215
					XLA350-40FBH	160	145	215

SOLENOID VALVE

XLB HIGH&LOW TEMPERATURE VALVE



Direct acting compact solenoid valve



Pilot operated solenoid valve

Features

1. 2/2 way, closed when de-enegized, open when energized.
2. Body material: brass; component: stainless steel
3. Ambiet temperature: -20~65℃
4. Operating pressure: 0.0~50.0kgf/cm²
5. Media temperature: low temp: -100℃ ~ -10℃
   high temp: 99℃ ~ 200℃
6. Media: steam, heat conducting oil, N2, O2, CO2.
7. Voltage: AC24V/110V220V/240V/380V, DC12V/24V
   Power consumption: AC27VA (16W) DC24W
   Voltage tolerance: -10%~+10%
8. Safety series: Class H heat resistance coil, IP65
9. Install: flow as arrow, solenoid vertical and upright direction. If media has the eranule impurity, please install more than 60 mesh filter.

Direct acting overall dimensions

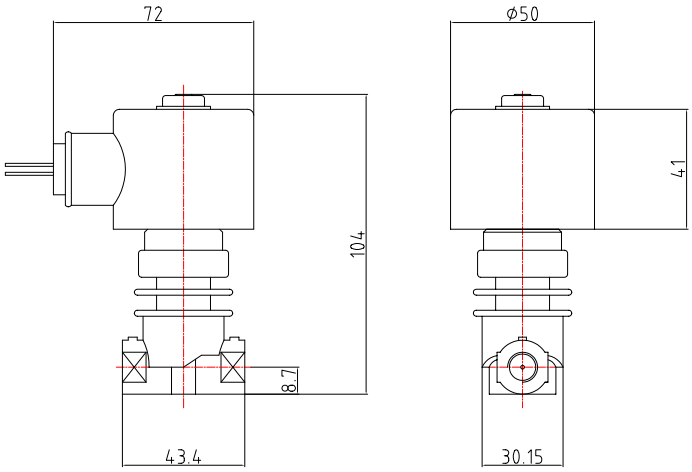

Overall dimensions

Model	A	B	H
XLB130-10	75	52	136
XLB130-15	75	52	136
XLB200-20	80	58	141
XLB250-25	104	80	152
XLB320-35	130	92	173
XLB400-40	130	90	173

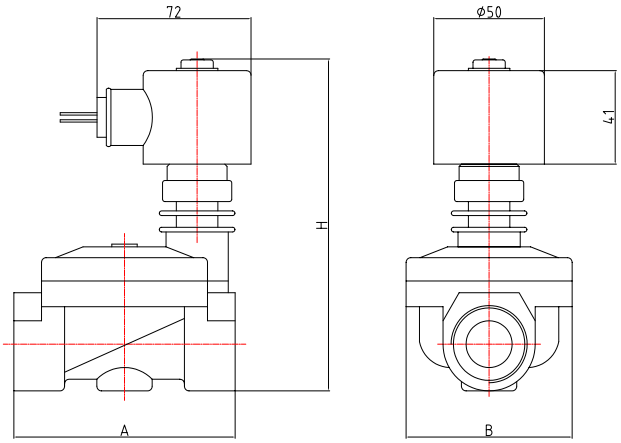

☎+86 574 82823826 | Fax +86 574 87157907 | sales@xhnotion.com | Web: www.xhnotion.com

- XLB series solenoid valve has a large flow rate and good applicability. Widely used in steam, oil and the other high & low temperature liquid control.
- Adopted high temperature resistance seal material imported PTFE, when the media passage the properties is good.
- Coils type: high temperature resistance coil meanwhile has the heat conduction protection.
- Long life time and high reliability.

Specification for XLB Series Solenoid Valve

Model	Thread Size(G)	Orifice(mm)	CV	Working Pressure(bar)			Medium Temp	
				Min	Max		Low Temp	Steam
Brass Body					Low Temp	Steam	℃	℃
XLB015-06	1/8"	1.5	0.08	0	50	30	-100 ~ -10	99~200
XLB020-06	1/8"	2.0	0.14	0	30	20	-100 ~ -10	99~200
XLB025-06	1/8"	2.5	0.23	0	17	17	-100 ~ -10	99~200
XLB030-06	1/8"	3.0	0.3	0	13	13	-100 ~ -10	99~200
XLB015-08	1/4"	1.5	0.08	0	50	30	-100 ~ -10	99~200
XLB020-08	1/4"	2.0	0.14	0	30	20	-100 ~ -10	99~200
XLB025-08	1/4"	2.5	0.23	0	17	17	-100 ~ -10	99~200
XLB030-08	1/4"	3.0	0.3	0	13	13	-100 ~ -10	99~200
XLB040-10	3/8"	4.0	0.6	0	7	7	-100 ~ -10	99~200
XLB050-10	3/8"	5.0	0.65	0	5	5	-100 ~ -10	99~200
XLB060-10	3/8"	6.0	0.8	0	4	4	-100 ~ -10	99~200
XLB050-15	1/2"	5.0	0.65	0	5	5	-100 ~ -10	99~200
XLB060-15	1/2"	6.0	0.8	0	4	4	-100 ~ -10	99~200
XLB130-10	3/8"	13	4.2	1	15	10	-80 ~ -10	99~185
XLB130-15	1/2"	13	4.2	1	15	10	-80 ~ -10	99~185
XLB200-20	3/4"	20	7.3	1	15	10	-80 ~ -10	99~185
XLB250-25	1"	25	11.5	1	15	10	-80 ~ -10	99~185
XLB320-35	1-1/4"	32	22.0	1	15	10	-80 ~ -10	99~185
XLB400-40	1-1/2"	40	29.0	1	15	10	-80 ~ -10	99~185

SOLENOID VALVE

XLH SERIES STEAM SOLENOID VALVE

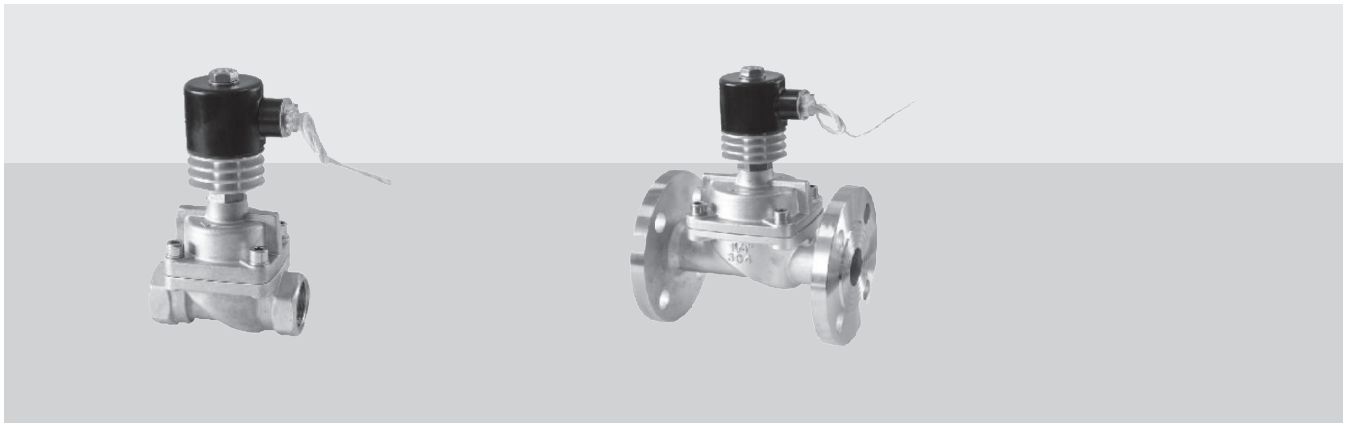

Features

1. Steam solenoid valve.
2. Medium temp. 5-250℃ .
3. Body material: stainless steel
4. Seal material: PTFE+Metal
5. Normally closed

* Warning: Make sure the system is clean before installing please fix a filter in the front of solenoid valve for long life.

Symbol

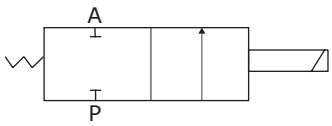

Specification for XLH Series Solenoid Valve

Model SS304	Orifice(mm)	CV value	Pipe Size	Working Pressure (Bar)		Seal Material
				Steam	Hot Oil	
XLH-10	15	4.5	3/8	0.5-25	0.5-25	Telfon+metal ⩽ 250℃
XLH-15	15	4.5	1/2			
XLH-20	20	8	3/4			
XLH-25	25	12	1			
XLH-35	35	22	1-1-4			
XLH-40	35	22	1-1/2			
XLH-50	50	45	2			

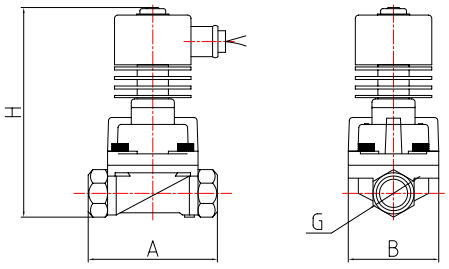

Model No.	A	B	C
XLH150-10	75	52	159
XLH150-15	75	52	159
XLH200-20	85	60	171
XLH250-25	100	70	178
XLH350-35	120	90	198
XLH350-40	120	90	198
XLH500-50	150	110	220

* If you need flange connction, please let us know.

☎+86 574 82823826 | Fax +86 574 87157907 | sales@xhnotion.com | Web: www.xhnotion.com

SOLENOID VALVE

XLG SERIES HIGH PRESSURESOLENOID VALVE



Features

1. High pressure solenoid valve.
2. Max pressure: 200 bar;
3. Body material: brass, stainless steel
4. VITON, PTFE seals are available
5. Normally closed & Normally open
6. Fit for high pressure washing, fog misting, High pressure testing

Symbol

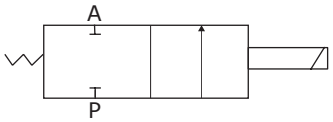

Specification for XLG Series Normally Closed Solenoid Valve

Model		Pipe	Orifice	CV value	Min Pressure (bar)	Max Work Pressure(bar)						Coil	Power			Weight (KG)
						AC			DC				AC(50Hz)		DC	
Brass	Stainless steel					Air	Water	Oil	Air	Water	Oil		VA	W	W	
XLG010-06	XLG010-06B	1/8"	1	0.04	0	120	120	100	120	120	100	D16011	22	12	18	0.40
XLG010-08	XLG010-08B	1/4"	1	0.04	0	120	120	100	120	120	100					0.40
XLG015-06	XLG015-06B	1/8"	1.5	0.1	0	90	90	70	90	90	70					0.40
XLG015-08	XLG015-08B	1/4"	1.5	0.1	0	90	90	70	90	90	70					0.40
XLG020-06	XLG020-06B	1/8"	2	0.15	0	50	50	40	50	50	40					0.40
XLG020-08	XLG020-08B	1/4"	2	0.15	0	50	50	40	50	50	40					0.40
XLG025-06	XLG025-06B	1/8"	2.5	0.23	0	35	35	25	35	35	25					0.40
XLG025-08	XLG025-08B	1/4"	2.5	0.23	0	35	35	25	35	35	25					0.40
XLG060-08	XLG060-08B	1/4"	6	0.8	0.5	100	100	80	70	70	50					0.50
XLG060-10	XLG060-10B	3/8"	6	0.8	0.5	100	100	80	70	70	50					0.66
XLG012-06	XLG012-06B	1/8"	1.2	0.05	0	200	200	150	200	200	150	D16021	39	24	25	0.65
XLG012-08	XLG012-08B	1/4"	1.2	0.05	0	200	200	150	200	200	150					0.65
XLG020-06	XLG020-06B	1/8"	2	0.15	0	100	100	80	100	100	80					0.65
XLG020-08	XLG020-08B	1/4"	2	0.15	0	100	100	80	100	100	80					0.65
XLG100-10	XLG100-10B	3/8"	10	1.8	0.5	100	100	80	70	70	50					1.10
XLG100-15	XLG100-15B	1/2"	10	1.8	0.5	100	100	80	70	70	50					1.09
XLG150-15	XLG150-15B	1/2"	15	4.6	1	200	200	180	200	200	180					2.43
XLG150-15	XLG150-15B	1/2"	15	4.6	0.5	70	70	50	70	70	50					1.02
XLG200-20	XLG200-20B	3/4"	20	8.5	0.5	70	70	50	70	70	50					1.27
XLG250-25	XLG250-25B	1"	25	12	0.5	70	70	50	70	70	50					1.74

Specification for XLG Series Normally Open Solenoid Valve

Model		Pipe	Orifice	CV value	Min Pressure (bar)	Max Work Pressure(bar)						Coil	Power			Weight (KG)
						AC			DC				AC(50Hz)		DC	
Brass	Stainless steel					Air	Water	Oil	Air	Water	Oil		VA	W	W	
XLG010-06H	XLG010-06BH	1/8"	1	0.04	0	90	90	75	90	90	75	D16011	22	12	18	0.43
XLG010-08H	XLG010-08BH	1/4"	1	0.04	0	90	90	75	90	90	75					0.43
XLG015-06H	XLG015-06BH	1/8"	1.5	0.1	0	50	50	40	50	50	40					0.43
XLG015-08H	XLG015-08BH	1/4"	1.5	0.1	0	50	50	40	50	50	40					0.43
XLG060-10H	XLG060-10BH	3/8"	6	0.8	0.5	100	100	80	100	100	80	D16021	39	24	25	0.85
XLG100-15H	XLG100-15BH	1/2"	10	1.8	0.5	70	70	50	70	70	50					1.22
XLG150-15H	XLG150-15BH	1/2"	15	4.6	0.5	50	50	40	50	50	40					1.09
XLG200-20H	XLG200-20BH	3/4"	20	8.5	0.5	50	50	40	50	50	40					1.34
XLG250-25H	XLG250-25BH	1"	25	12	0.5	50	50	40	50	50	40					1.81

Overall Dimensions

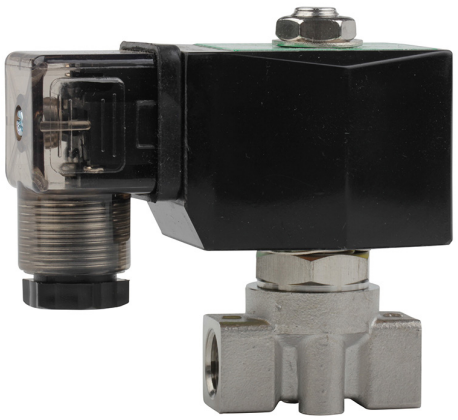

XLG015-06, XLG025-08

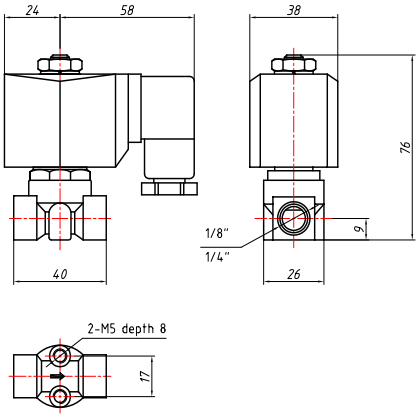



XLG012-08B, XLG020-08B

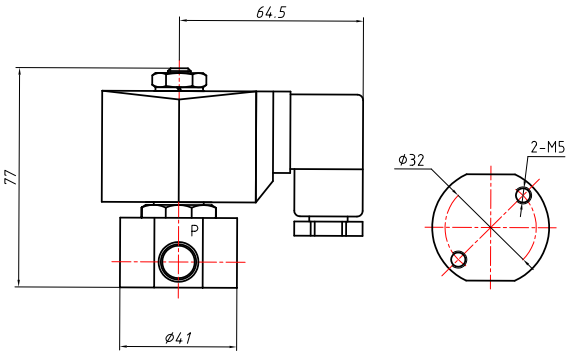

☎+86 574 82823826 | Fax +86 574 87157907 | sales@xhnotion.com | Web: www.xhnotion.com

XLG100-08B,10B,15B



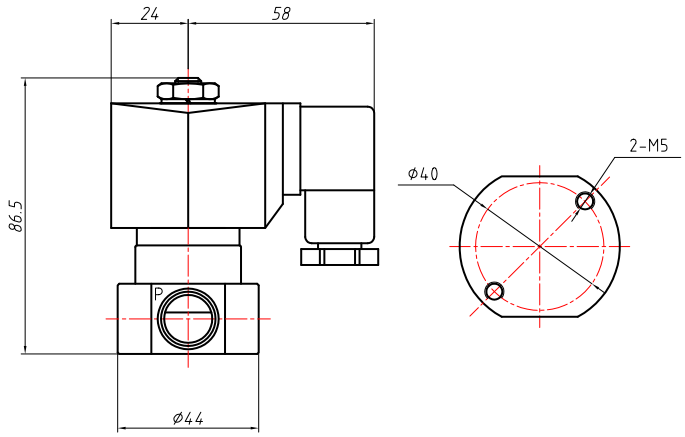

XLG150-15B



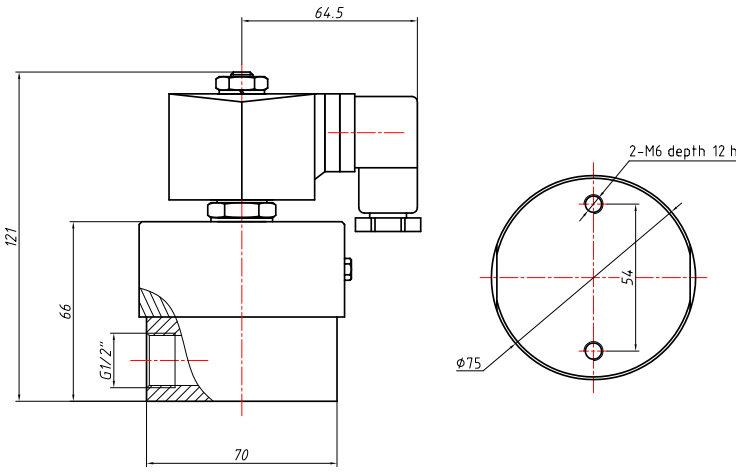

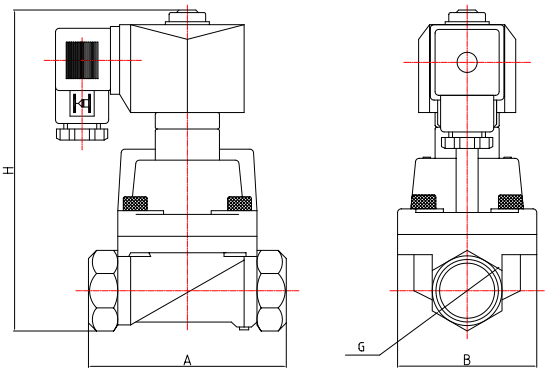

XLG150-15B, XLG200-20B, XLG250-25B

Model	A	B	H	G
XLG150-15B	75	52	130	1/2"
XLG200-20B	85	60	141	3/4
XLG250-25B	100	70	148	1"

SOLENOID VALVE



Power Saving Coils
Max pressure 360 Bar
Stainless steel body

Features

1. 2/2-way Super High Pressure Solenoid Valve,closed when de-energized,open when energized.
2.The product is special design,power will be normal type 1/4,low temperature,small in size,large flow rate.
3. Body material: Stainless Steel
4. Ambient temp.:0℃ ~65℃ Fluidstemp.: 0℃ ~110℃ .
5. Flow as the arrow,mounts in any position;Best position is solenoid verticaland upright direction.
6. Voltage: AC 220V/230V/110V DC 24V Voltage Tolerance:+10% to-10% applicable voltage.
7. Seal material is PTFE (PEEK)

Specification

Model Code	Pipe Conn-ection	Orifice mm	CV Factor	Operating pressure differential (kgf/cm²)						Max. fluids Temp. ℃	Weight Kg
				Min.	Max.						
					Air Gas		Water Hot water Liquids		Light oil ≤20CST		
					AC	DC	AC	DC	AC		
SPV010-06B	1/8"	1	0.04	0	360	260	360	260	360	110	0.8
SPV012-06B		1.2	0.05	0	300	240	300	240	300	110	
SPV015-06B		1.5	0.08	0	250	190	250	190	250	110	
SPV010-08B	1/4"	1	0.04	0	360	260	360	260	360	110	0.8
SPV012-08B		1.2	0.05	0	300	240	300	240	300	110	
SPV015-08B		1.5	0.08	0	250	190	250	190	250	110	
SPV100-08B		10	1.8	1	360	300	360	300	360	110	
SPV100-10B	3/8"	10	2.1	1	360	300	360	300	360	110	3
SPV100-15B	1/2"	10	2.1	1	360	300	360	300	360	110	
SPV200-20B	3/4	20	6.5	1	300	240	300	240	300	240	3.6
SPV250-25B	1	25	10	1	300	240	300	240	300	240	5.3

☎+86 574 82823826 | Fax +86 574 87157907 | sales@xhnotion.com | Web: www.xhnotion.com

Overall Dimensions

SPV-06B,SPV-08B

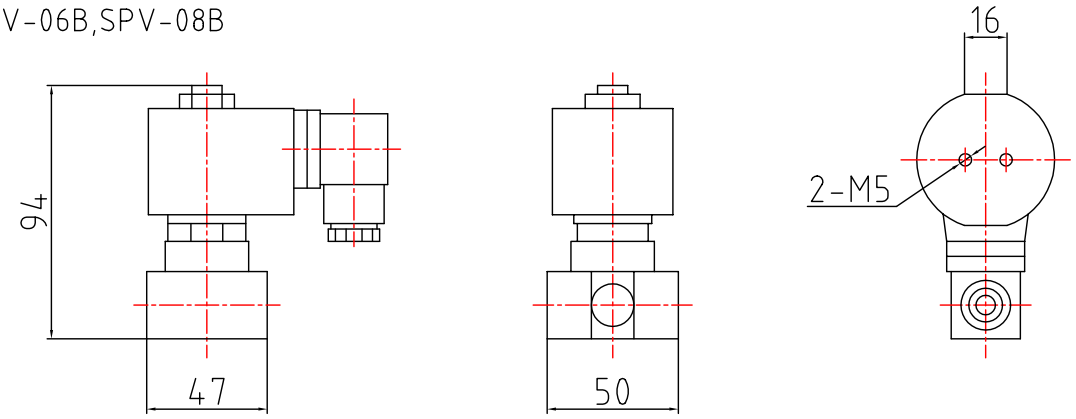

SPV-10B SPV-15B SPV-20B SPV-25B

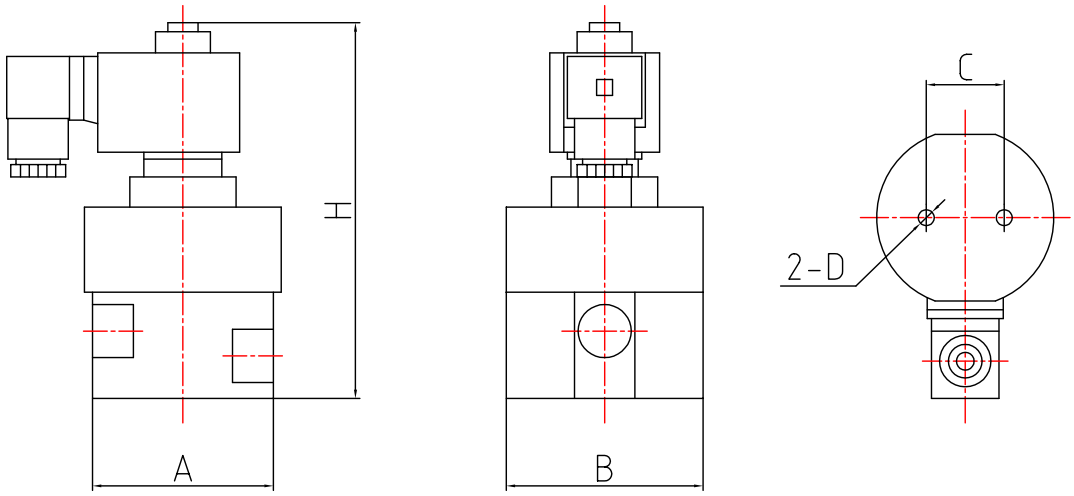

Model Code	A	B	H	C	D
SPV-10B	70	74	141	29	M6
SPV-15B	70	74	141	29	M6
SPV-20B	79	84	150	36	M6
SPV-25B	93	99	160	45	M8



Direct Acting Valve

Application

They can be used for the military, aerospace, ship building, nuclear industry, petrochemical, power chemical, light industry, machinery, scientific research, industrial furnace, drying equipment, water supply and drainage, fire protection, food health care, cleaning equipment, fountain, the medium in the pipeline automatic control and other fields.



Pilot Piston Valve

Product Features

- Patent technology with unique design
- Direct acting valve and pilot operate valve
- Good sealing
- Quick switch
- Temperature range: -200~300℃
- Max pressure : 800 Bar
- Long life

Main Technical Specifications

Model	XSG
Acting mode	Normally open, Normally closed, Latching
The power supply voltage	DC 12 - 220 V; AC 24 - 380 V
The valve body material	Stainless steel
Orifice	DN1-DN80
Applicable medium	Water, Steam, Oil, Corrosive fluid
Pressure range	0.1-80 Mpa
Temperature range	(-200 ,-50℃) - (+120,+300℃)
Protective performance	Dustproof, Water proof, Explosion - proof (according to the working condition)
Coil connection	Connection seat type; Lead; Plug type
Port connection	Flange, Welding, Thread (external threads and a special interface can be customized adapter).

☎+86 574 82823826 | Fax +86 574 87157907 | sales@xhnotion.com | Web: www.xhnotion.com

Drawings

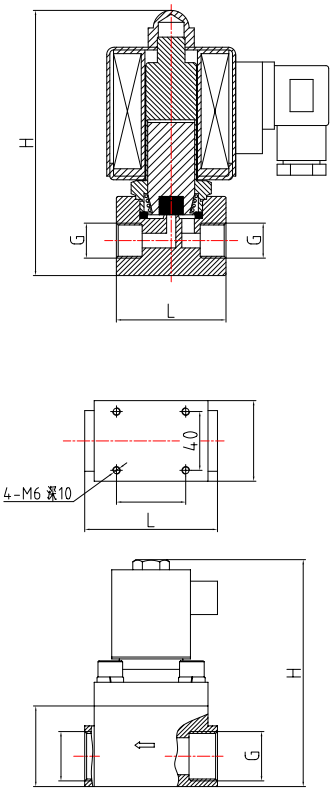

Model	L	H	W	G
XSG-1	48	160	35	1/8"
XSG-10	70	155	40	3/8"
XSG-15	80	185	53	1/2"
XSG-20	95	220	68	3/4"
XSG-25	95	190	62	1"
XSG-40	127	215	78	1-1/2"
XSG-50	180	270	104	2"

Other High Pressure Valve



XSG Manual Steam Valve



XSG Super High Pressure Valve



XSG Super High Temperature Valve



XSG Low Temperature Valve



XSG Explosion Proof Valve



XSG Flange Valve

SOLENOID VALVE

XCT SERIES TIMER DRAIN VALVE


XCT-A


XCT-B


High pressure: 40 bar


XCT-D


XCT- T


XCT-ET


Filter ball valve


Stainless steel valve

Features

1. Automatically run and free maintenance.

2. Suitable for automatically drain of condense water in many occasions and irrigation system.

3. Drain time and interval time is adjusted with test button.

4. Filter ball valve can be installed before drain valve to avoid the block.

5. Orifice: 3mm , Max pressure: 16 Bar.

6. Conforming to CE certificate and the coil reach IP65 protection grade.

Symbol

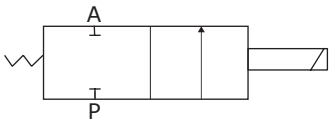

XCT-A Specification

Valve	XCT-A
Type	2/2 direct acting valve
Valve port size	1/2" 3/8" or 1/4"
Max working pressure	0-10 Bar or 0-16 Bar
Ambient temperature	0℃ ~55℃
Max medium temperature	80℃
Valve body material	brass (stainless steel could be available upon request)
Protection grade	IP65
Voltage	24-230V AC/DC
Voltage range	+/-10%
Mounting in any position	Yes

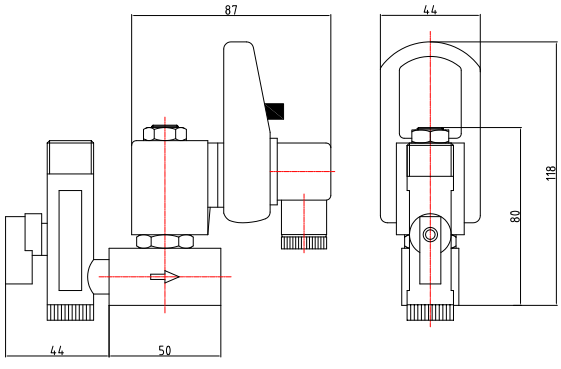

☎+86 574 82823826 | Fax +86 574 87157907 | sales@xhnotion.com | Web: www.xhnotion.com

XCT-B Specification

Valve	XCT-B
Type	2/2 direct acting valve
Valve port size	1/2"
Max working pressure	16 Bar
Ambient temperature	0℃ ~55℃
Max medium temperature	80℃
Valve body material	brass
Protection grade	IP65
Voltage	24-230V AC/DC
Voltage range	+/-10%
Mounting in any position	Yes

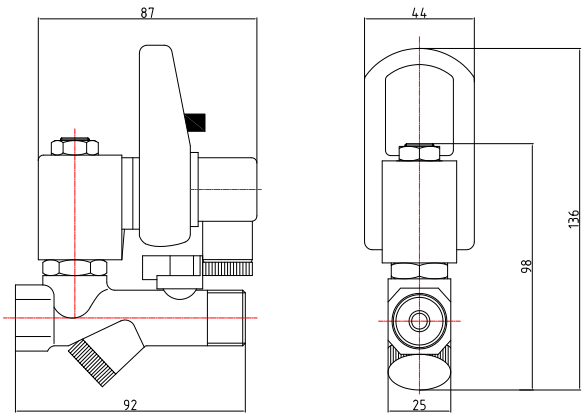

XCT-T Specification

Timer	XCT-T
Interval time(OFF time)	0.5-45 minutes
Discharge time(ON time)	0.5-10 Seconds
Timer manual TEST switch	Yes, micro switch
Voltage	24-240V AC/DC 50/60Hz
Current consumption	4 mA
Ambient temperature	-10℃ ~50℃
Protection grade	IP65
Timer shell material	ABS Plastic FR Grade
Timer connection	DIN43650A
Timer indicators	On/off

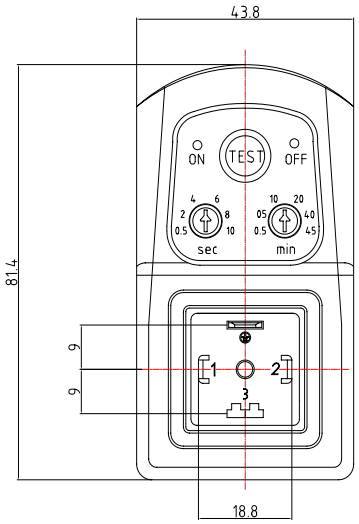

XCT-ED Specification

Timer	XCT-ET
Interval time(OFF time)	0.5-99 minute
Discharge time(ON time)	0.5-99 Seconds
Timer manual TEST switch	Yes, micro switch
Voltage	24-240V AC/DC 50/60Hz
Current consumption	4mA
Ambient temperature	-10℃ ~50℃
Protection grade	IP65
Timer shell material	ABS Plastic FR Grade
Timer connection	DIN43650A
Timer indicators	Green light indicating ON, red light indicating OFF

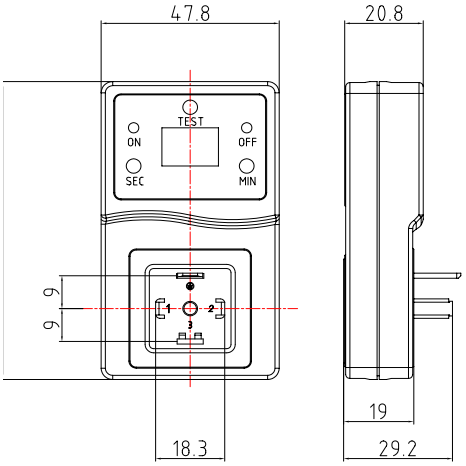

SOLENOID VALVE

UW SERIES UNDERWATER SOLENOID VALVE



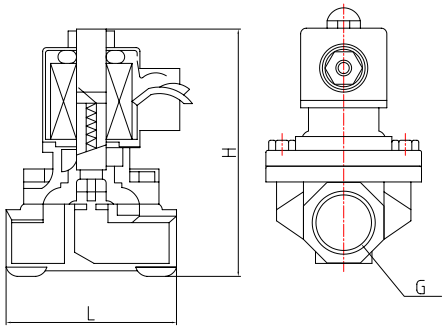

DIMENSIONS

Model	L	H	G
UW-15	69	117	1/2
UW-20	73	123.5	3/4
UW-25	99	134.5	1
UW-35	112	172	1-1/4
UW-40	123	172	1-1/2
UW-50	168	209	2
UW-65F	250	260	
UW-80F	270	275	
UW-100F	350	310	
UW-125F	400	380	
UW-150F	450	405	

SPECIFICATIONS

Model	Pipe Size	Orifice (mm)	CV Value	Working Pressure (Bar)	Body Material	Seals	Voltage
UW-15	G1/2"	15	3.2	0-6 bar	brass	NBR seals ≤ 80℃; Viton seals ≤ 150℃; EPDM seals ≤ 120℃ Silicone seals ≤ 100℃	220VAC 110VAC 24VDC 12VDC make other voltage as requested
UW-20	G3/4"	20	6				
UW-25	G1"	25	9				
UW-35	G1/4"	32	12				
UW-40	G1/2"	40	21				
UW-50	G2"	50	30				
UW-65F	4 Flange Hole φ17.5 Hose Diameter φ145Hose Distance	65	52.5	0.6-5 bar	cast steel		
UW-80F	4 Flange Hole φ17.5Hose Diameter φ160Hose Distance	80	81.7				
UW-100F	8 Flange Hole φ17.5Hose Diameter φ180Hose Distance	100	128.4				
UW-125F	8 Flange Hole φ17.5Hose Diameter φ210Hose Distance	125	221.7				
UW-150F	8 Flange Hole φ22Hose Diameter φ240Hose Distance	150	291.7				

☎+86 574 82823826 | Fax +86 574 87157907 | sales@xhnotion.com | Web: www.xhnotion.com

SOLENOID VALVE

2C SERIES DRINKING WATER SOLENOID VALVE

Features

1. This series can be used for drinking water, materials get ROHS certificate.

2. Seal material is EPDM or Silicone, which is used for hot water or Ozone.

3. Directing acting, pilot acting, and 3 ways are available.

4. Connection way: thread 1/8, 1/4; tubes 1/4"; Silicone tubes I.D. 1/4";

5. Orifice: 3-10mm , Max pressure: 10 Bar.

6. Conforming to CE certificate.

Specifications



2C-1



2C-2

Model	2C-01	2C-02
Type	2/2-way N.C.	
Acting	Direct	
Fluid	Air / Water	
Temperature	0-100 ℃	
Surround Temp.	-10℃ + 40℃	
Orifice	2.5 mm	
CV	0.21	
Working Pressure	0 - 8 bar	
Max Pressure	10 bar	
Connector	G1/8	G1/4
Power	AC 6.8 VA 5.5W	
Voltage	AC220V 110V 50HZ DC24V 12V	
Voltage Range	±10%	
Response Time	6-20 ms	
Duty	100%ED	
Life	100000 times	

Drawing

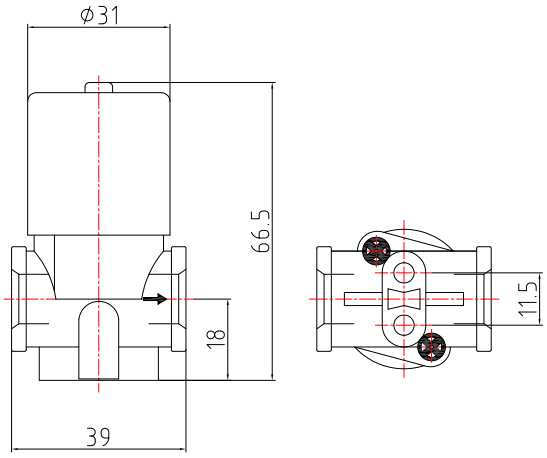

Material

Body	POM White
Seal	EPDM
Tube	SUS304
Plug	Magnet SUS
Spring	SUS304

SOLENOID VALVE

2C SERIES DRINKING WATER SOLENOID VALVE



2C-3



2C-4

Model	2C-03	2C-04
Type	2/2-way N.C.	
Acting	Direct	
Fluid	Air / Water	
Temperature	0-100 ℃	
Surround Temp.	-10℃ + 40℃	
Orifice	8 mm	9 mm
CV	0.21	
Working Pressure	0 - 0.06 Bar	
Max Pressure	0.1 bar	
Connector	12mm	12mm
Power	9.3 W	
Voltage	DC24V 12V	
Voltage Range	±10%	
Response Time	10-50 ms	
Duty	100%ED	
Life	100000 times	

Drawing

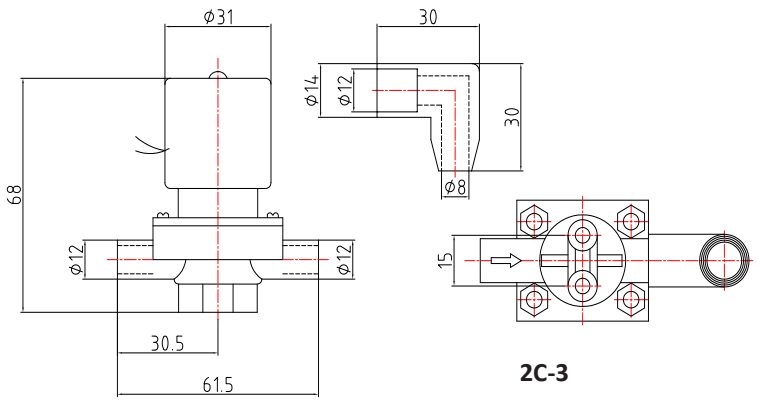

2C-3

2C-4

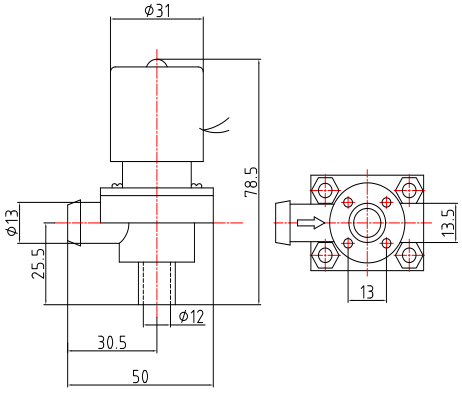

Material

Body	PP
Seal	Silicone
Tube	SUS304
Plug	Magnet SUS
Spring	SUS304

☎+86 574 82823826 | Fax +86 574 87157907 | sales@xhnotion.com | Web: www.xhnotion.com

SOLENOID VALVE

2C SERIES DRINKING WATER SOLENOID VALVE



2C-5 2C-6

Model	2C-05	2C-06
Type	2/2-way N.C.	
Acting	Direct	
Fluid	Air / Water	
Temperature	0-100 ℃	
Surround Temp.	-10℃ + 40℃	
Orifice	3 mm	
CV	0.23	
Working Pressure	0 - 7 bar	
Max Pressure	10 bar	
Connector	G1/8	G1/4
Power	5.5W	
Voltage	AC220V 110V 50HZ DC24V 12V	
Voltage Range	±10%	
Insulation	B	
Duty	100%ED	
Life	100000 times	

Drawing

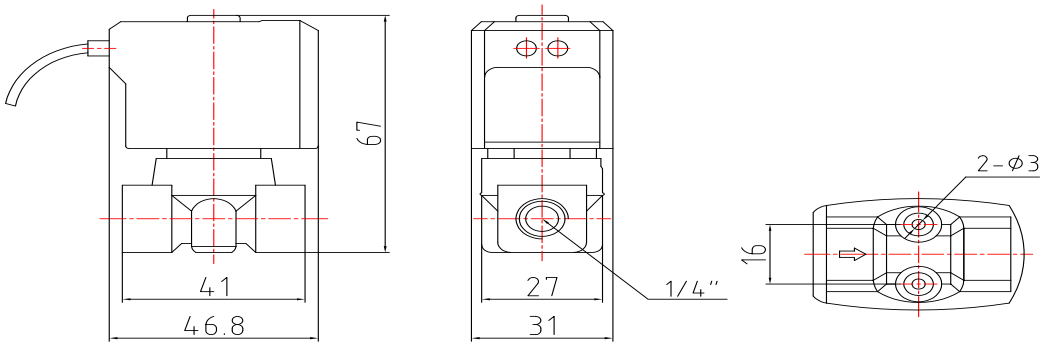

Material

Body	Nylon
Seal	EPDM, NBR
Tube	SUS304
Plug	Magnet SUS
Spring	SUS304

SOLENOID VALVE

2C SERIES DRINKING WATER SOLENOID VALVE



2C - 07

Specification

Model	2C-07
Type	2/2-way N.C.
Acting	Direct
Fluid	Air / Water
Temperature	0-100 ℃
Surround Temp.	-10℃ + 40℃
Orifice	2.5 mm
CV	0.21
Working Pressure	0 - 8 bar
Max Pressure	10 bar
Connector	1/4"Quick Connect
Power	5.5W
Voltage	AC220V 110V 50HZ DC24V 12V
Voltage Range	±10%
Insulation	B
Duty	100%ED
Life	100000 times

Drawing

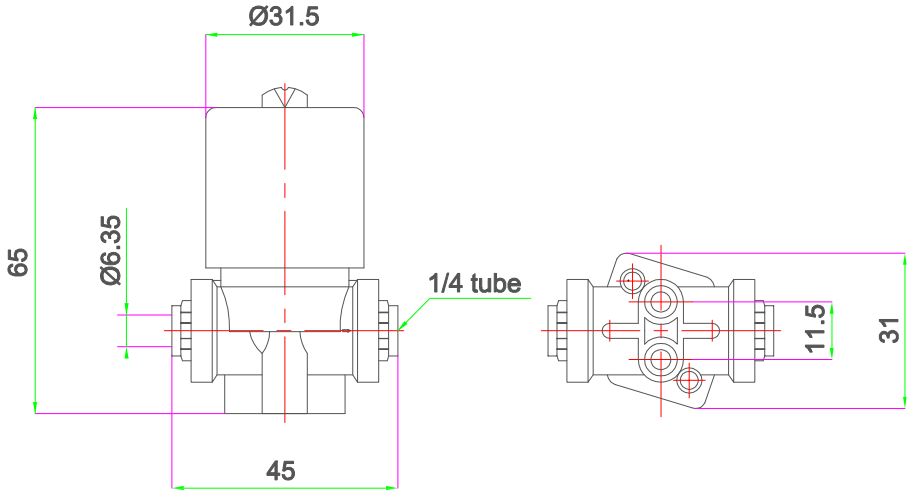

Material

Body	POM White
Seal	EPDM
Tube	SUS304
Plug	Magnet SUS
Spring	SUS304

☎+86 574 82823826 | Fax +86 574 87157907 | sales@xhnotion.com | Web: www.xhnotion.com

SOLENOID VALVE

2C SERIES DRINKING WATER SOLENOID VALVE



2C - 08 - 02/03

Specification

Model	2C-08-02	2C-08-03
Type	2/2-way N.C.	
Acting	Pilot	
Fluid	Water	
Temperature	0-100 ℃	
Surround Temp.	-10℃ + 40℃	
Orifice	5.5 mm	8.5 mm
Flow	3.8L at 2 bar	6.5L at 2 bar
Working Pressure	0.2 - 8 bar	
Max Pressure	15 bar	
Connector	1/4"Quick Connect	3/8" Quick Connect
Power	4.8 W	
Voltage	DC24 V	
Voltage Range	±10%	
Insulation	B	
Duty	100%E D	
Life	100000 times	

Drawing

2C-08-02

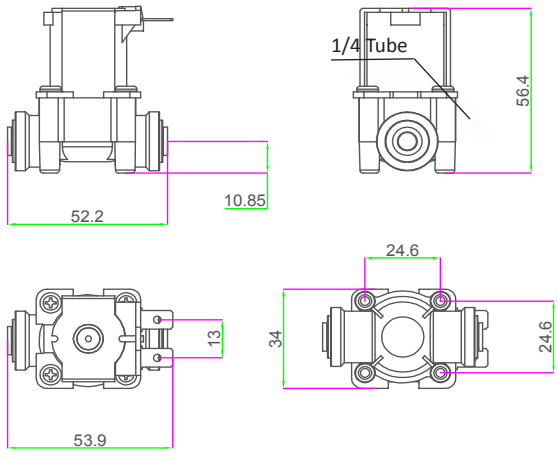

2C-08-03

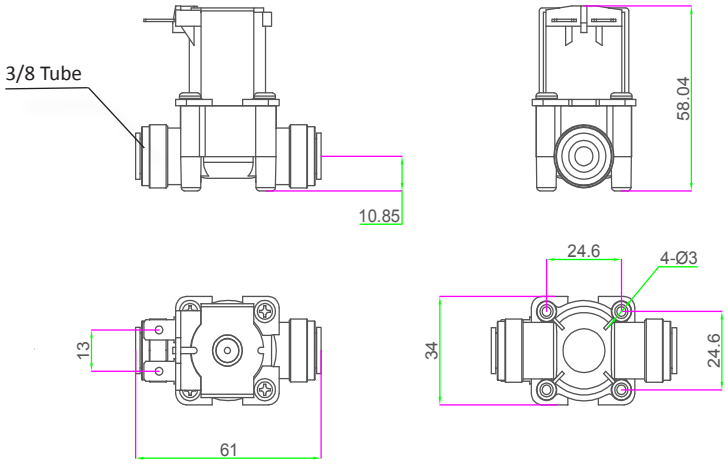

Material

Body	POM White
Seal	EPDM
Tube	SUS304
Plug	Magnet SUS
Spring	SUS304

SOLENOID VALVE

2C SERIES DRINKING WATER SOLENOID VALVE

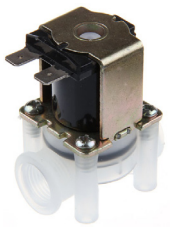

2C-9



2C-10

Model	2C-09	2C-10
Type	2/2-way N.C.	
Acting	Pilot	
Fluid	Water	
Temperature	0-100 ℃	
Surround Temp.	-10℃ + 40℃	
Orifice	5 mm	4 mm
Working Pressure	0.2 - 8 Bar	0.2 - 4 Bar
Max Pressure	10 bar	
Connector	1/4 thread	1/4 tube
Power	4 W	
Voltage	DC24V 12V	
Voltage Range	±10%	
Response Time	10-50 ms	
Duty	100%ED	

Drawings

2C-10 lead wire

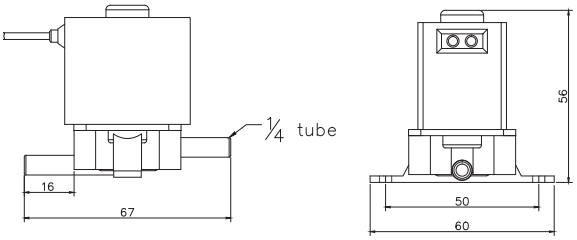

2C-10 pin connection

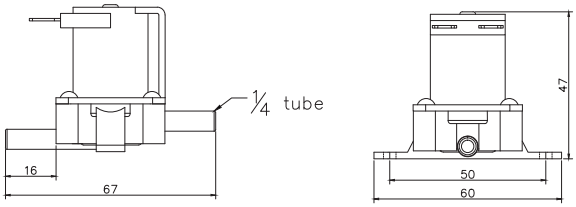

2C-9

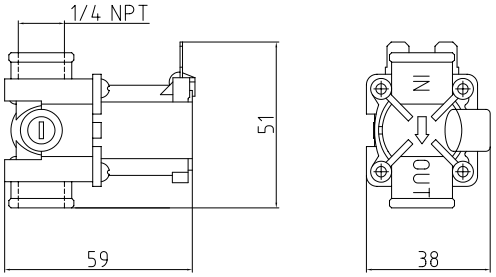

Material

Body	POM White
Seal	EPDM
Tube	SUS304
Plug	Magnet SUS
Spring	SUS304

☎+86 574 82823826 | Fax +86 574 87157907 | sales@xhnotion.com | Web: www.xhnotion.com

SOLENOID VALVE

3C SERIES DRINKING WATER SOLENOID VALVE



3C-01



3C-02

Model	3C-01	3C-02
Type	2/3-way N.C.	
Acting	Direct	
Fluid	Water	
Temperature	0-100 ℃	
Surround Temp.	-10℃ + 40℃	
Orifice	4 mm	4 mm
Working Pressure	0 -1 Bar	0 - 4 Bar
Max Pressure	5 bar	
Connector	1/4 tube	1/4 tube
Power	4 W	8W
Voltage	DC24V 12V	
Voltage Range	±10%	
Response Time	10-50 ms	
Duty	100%ED	

Drawings

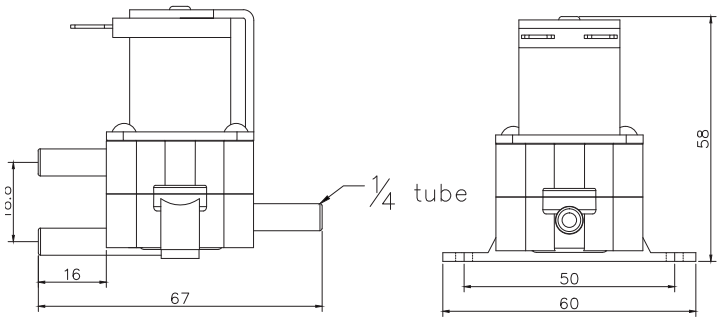

3C-01

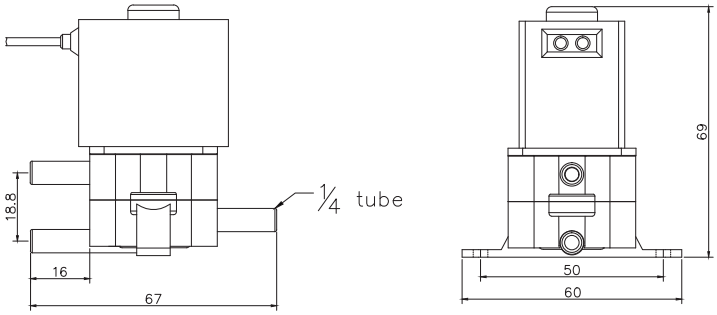

3C-02

Material

Body	POM White
Seal	EPDM
Tube	SUS304
Plug	Magnet SUS
Spring	SUS304

SOLENOID VALVE

2WP SERIES PLASTIC SOLENOID VALVE

2WP Series Normally Closed Solenoid Valve



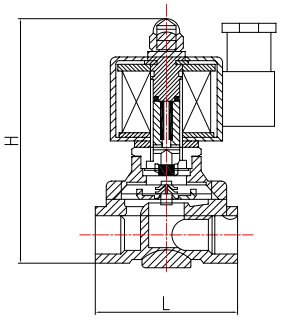

Model	2WP150-15	2WP200-20	2WP250-25
Working Type	Normally Closed		
Medium	Air,Water,Light,Oil,Gas		
Acting Motion	Direct Acting		
Orifice(mm)	15	20	25
CV Value	4.8	7.6	12
Pipe Size	G1/2"	G3/4"	G1"
Working Pressure	0-7 bar		
Working Temperature	0~60℃		
Viscosity	Under 20CST		
Seal Material	NBR (VITON option)		
Body Material	PA		
Voltage	220VAC,110VAC,12VDC,24VDC		

Model	2WP150-15	2WP200-20	2WP250-25
L(mm)	74	70	87
H(mm)	115	115	125

2WP Series Normally Open Solenoid Valve



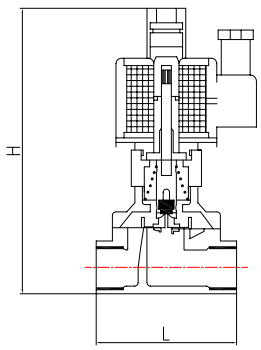

Model	2WP150-15H	2WP200-20H	2WP250-25H
Working Type	Normally Open		
Medium	Air,Water,Light,Oil,Gas		
Acting Motion	Direct Acting		
Orifice(mm)	15	20	25
CV Value	4.8	7.6	12
Pipe Size	G1/2"	G3/4"	G1"
Working Pressure	0-5 Bar		
Working Temperature	0~60 degree Celsius		
Viscosity	Under 20CST		
Seal Material	NBR (VITON option)		
Body Material	PA		
Voltage	220VAC,110VAC,12VDC,24VDC		

Model	2WP150-15H	2WP200-20H	2WP250-25H
L(mm)	74	70	87
H(mm)	145	145	165

☎+86 574 82823826 | Fax +86 574 87157907 | sales@xhnotion.com | Web: www.xhnotion.com

2WP-40, 2WP-50 Solenoid Valve



IP65 Coil

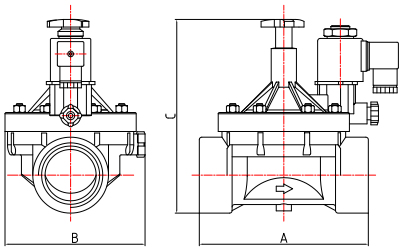

Feature

1. Manual switch can control valve on/off when emergency of no electricity power.

2. The valves is installed with filter mess and flow regulator.

3. IP65 coil and low power consumption coil are available.

Model	2WP-40	2WP-50
Pipe Size	1-1/2"	2"
Orifice (mm)	40	50
CV Value	28	48
Working Temperature	0~60	
Working Pressure	0.3~8bar	
Max Compression Resistance	12 bar	
Voltage	220VAC/50HZ, 110VAC/50HZ, DC24V.	

Model	2WP-40	2WP-50
A (mm)	151	170
B (mm)	130	140
C (mm)	176	190

2WP-65, 2WP-80 Solenoid Valve





Model	2WP-80	2WP-100
Pipe Size	3"	4"
Flow	5-60 m3/h	5-120 m3/h
Orifice	80	100
Working Temperature	0~60	
Working Pressure	0.1~10 bar	
Max Compression Resistance	12 bar	
Voltage	220VAC/50HZ, 110VAC/50HZ, DC24V. Latching	

Model	2WP-80	2WP-100
L(mm)	308	255
W(mm)	160	238
H(mm)	412	335

2VP Series Normally Closed Solenoid Valve



Model	2VP025-08	2VP150-15
Working Type	Pilot operated	
Pattern	Normally closed, pulse	
Working Pressure	0.02MPa-0.8MPa	
Connection Thread	G1/4	G1/2
Medium	air, water, oil	
Valve Body	PA	
Fluid Temperature	0-60℃	
Ambient Temperature	0-45℃ 0-45℃	
Voltage	AC220V, AC110V, DC110V, AC48V, DC48V, AC36V, DC36V, power 6W; Pulse 4.5V, 3.6V or 6V pulsed power 2.5W	
Reliability	Power for more than 12 hours, not short-circuit. Stuck.	
Leads Wire Length	30cm	

Drawings

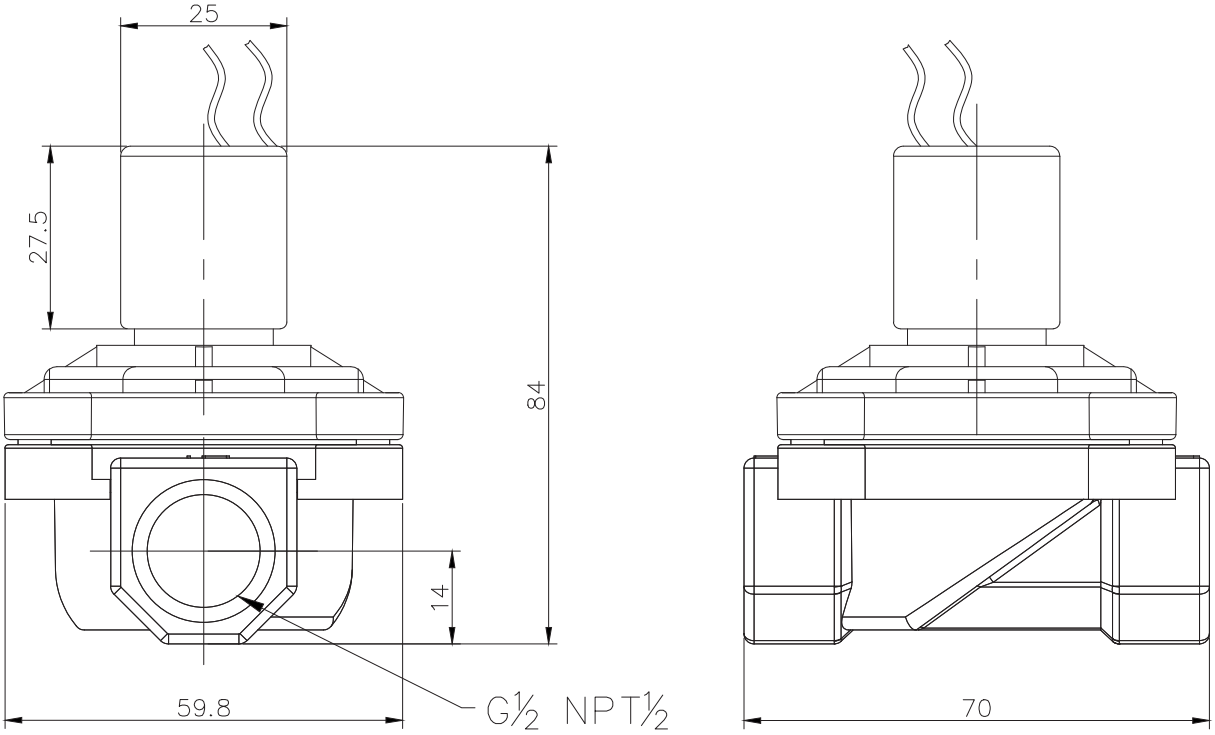

☎+86 574 82823826 | Fax +86 574 87157907 | sales@xhnotion.com | Web: www.xhnotion.com



Seals	Temperature(℃)		Fluids
	Min	Max	
NBR(N)	-5	80	Air/ Neutral Gas/Water
EPDM(E)	-10	120	Hot-water/Low Temprature Steam
FKM(V)	-10	150	Petrol/Diesel/Fuel Oil

Specification for PP Series Nomally Closed Solenoid Valve

Model	Pipe	Orifice	CV value	MIN Pressure (bar)	Max Work Pressure(bar)						Coil	25Power			Weight (KG)
					AC			DC				AC(50Hz)		DC	
					Air	Water	Oil	Air	Water	Oil		VA	W	W	
PP150-15	1/2"	15	4.6	0.3	10	10	7	7	7	5	W09511	8	4.5	6	0.24
PP200-20	3/4"	20	8.5	0.3	10	10	7	7	7	5					0.27
PP250-25	1"	25	12	0.3	10	10	7	7	7	5					0.32
PP150-15	1/2"	15	4.6	0.3	10	10	7	10	10	7	W11011 D11011	9	4.5	8	0.28
PP200-20	3/4"	20	8.5	0.3	10	10	7	10	10	7					0.31
PP250-25	1"	25	12	0.3	10	10	7	10	10	7					0.36

Specification for PP Series Nomally Open Solenoid Valve

Model	Pipe	Orifice	CV value	MIN Pressure (bar)	Max Work Pressure(bar)						Coil	25Power			Weight (KG)
					AC			DC				AC(50Hz)		DC	
					Air	Water	Oil	Air	Water	Oil		VA	W	W	
PP150-15H	1/2"	15	4.6	0.3	10	10	7	10	10	7	D16011	19	11	18	0.48
PP200-20H	3/4"	20	8.5	0.3	10	10	7	10	10	7					0.51
PP250-25H	1"	25	12	0.3	10	10	7	10	10	7					0.56

Drawings

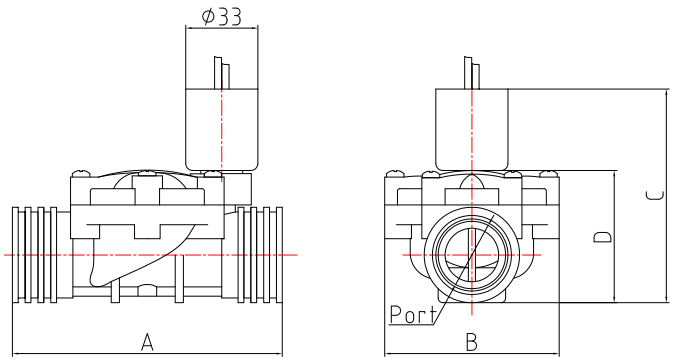

N.C.

Model	A	B	C		D
			W09511	W11011	
PP150-15	88	50	85.5	89	44.5
PP200-20	98	67	90.5	94	51
PP250-25	120	80	97	100.5	60

N.O.

Model	A	B	C	D
PP150-15H	88	50	108	44.5
PP200-20H	98	67	113	51
PP250-25H	120	80	129.5	60

SOLENOID VALVE

XLT SERIES 2/3 WAY SOLENOID VALVE



1.Seal Material: NBR, EPDM, VITION

2.Valve Body: Brass

3.Fluid media: Gas or Liquid

4.Fluid Temperature: 0-80℃

5.Ambient Temperature: -10~+60℃

6.Pressure: 0~20 Bar

7.Voltage: AC220V, DC24V ± 10% Voltage tolerance

8.Installation: the actuator can only be installed vertically upwards

Specification

Model Code	SIZE	Orifice mm	CV factor	Operating pressure differential kgf/cm²				Max temp. ℃	Power (W)	Weight Kg
				Min pressure	Max pressure					
Forged Brass					Air Gas	Water Liquids	Light oil ≥20CST		AC/DC	
XLT060-08	1/4"	6	0.8	0	10	10	8	80	25	1.1
XLT100-10	3/8"	10	1.1	0	20	20	10	80	46	5.4
XLT100-15	1/2"	10	1.3	0	20	20	10	80	46	5.4
XLT320-35	1 1/4"	32	24	0	10	10	7	80	100	17.5
XLT320-40	1 1/2"	32	24	0	10	10	7	80	100	17.5

Overall Dimensions

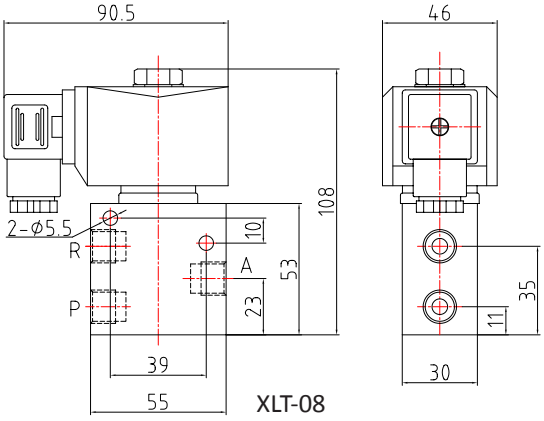

XLT-08

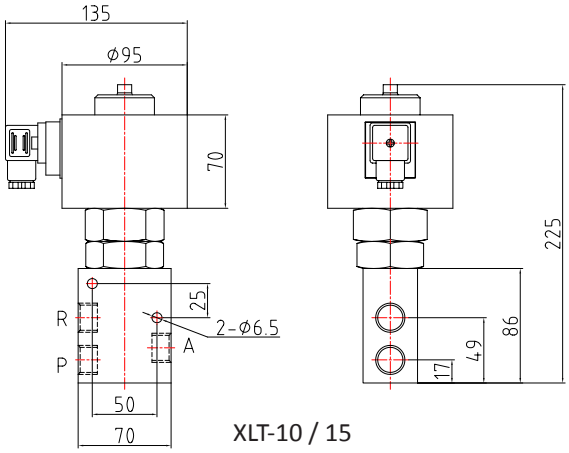

XLT-10 / 15

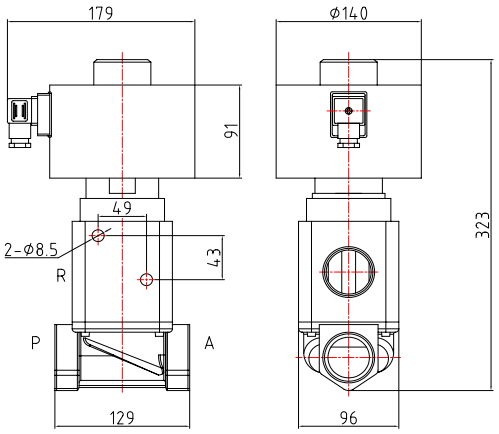

XLT-35 / 40

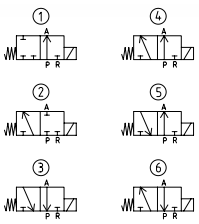

1. 2/2 normally closed type: P is the entrance, A is for exit, and R is blocked.
2. 2/2 normally open type: R is the entrance, A is for exit, and P is blocked.
3. 3/2, 1 in and 2 out of flow type: A is the entrance, P and R are exported.
4. 3/2, 2, 1 out of the confluence type: P, R for entrance, and A for exit.
5. 3/2 normally closed type: P is pressure port, A is outlet, R is exhaust port.
6. 3/2 normally open type: R is pressure port, A is outlet, P is outlet.

☎+86 574 82823826 | Fax +86 574 87157907 | sales@xhnotion.com | Web: www.xhnotion.com

SOLENOID VALVE

3N SERIES 2/3 WAY SOLENOID VALVE



Features

1. 2/3 way direct acting valve
2. Medium: air, gas
3. Working pressure: 0-16 Bar
4. Body material: brass, stainless steel
5. NBR, VITON seals are available
6. Normally closed, normally open, universal type, diverting type, etc.

How to Order

3N	1	015	08	V
Model	Working Type	Orifice	Port Size	Material

Model

3 way valve

3N
XST
BD23

Working Type

1: Normally Closed
2. Normally Open
3. Universal type

Orifice

010: 1mm
012: 1.2mm
015: 1.5mm
020: 2mm
025: 2.5mm
030: 3mm
040: 4mm

Port Size

06: 1/8”
08: 1/4”
10: 3/8”
15: 1/2”

Material

Seals	Temperature(℃)		Fluids
	Min	Max	
NBR(N)	-5	80	Air, Neutral gas, Water
EPDM(E)	-10	120	Hot water, Low temperature steam
FKM(V)	-10	150	Gasoline, Diesel oil, Fuel oil

Regular voltage : 220VAC, 110VAC, 24VDC, 12VDC, Other voltages are also customized as requested

Specification for 3N1 Series Normally Closed

Model	Pipe	Orifice		Cv value	Max Work Pressure(bar)						Coil	Power			Weight (KG)
					AC			DC				AC(50Hz)		DC	
		Bottom	Top		Air	Water	Oil	Air	Water	Oil		VA	W	W	
3N1-015-06	1/8"	1.5	1.5	0.07	16	16	13	16	16	13	D14511	20	12	12	0.45
3N1-025-06	1/8"	2.5	1.5	0.21	7	7	5	7	7	5					0.45
3N1-030-06	1/8"	3	1.5	0.23	5	5	3	5	5	3					0.45
3N1-015-08	1/4"	1.5	1.5	0.07	16	16	13	16	16	13					0.45
3N1-025-08	1/4"	2.5	1.5	0.21	7	7	5	7	7	5					0.45
3N1-030-08	1/4"	3	1.5	0.23	5	5	3	5	5	3					0.45

Specification for 3N2 Series Normally Open

Model	Pipe	Orifice		Cv value	Max Work Pressure(bar)						Coil	Power			Weight (KG)
					AC			DC				AC(50Hz)		DC	
		Bottom	Top		Air	Water	Oil	Air	Water	Oil		VA	W	W	
3N2-015-06	1/8"	1.5	1.5	0.07	16	16	13	16	16	13	D14511	20	12	12	0.45
3N2-025-06	1/8"	2.5	1.5	0.21	16	16	13	16	16	13					0.45
3N2-030-06	1/8"	3	1.5	0.23	16	16	13	16	16	13					0.45
3N2-015-08	1/4"	1.5	1.5	0.07	16	16	13	16	16	13					0.45
3N2-025-08	1/4"	2.5	1.5	0.21	16	16	13	16	16	13					0.45
3N2-030-08	1/4"	3	1.5	0.23	16	16	13	16	16	13					0.45

SOLENOID VALVE

3N SERIES 2/3 WAY SOLENOID VALVE

Specification for 3N Series Universal Type

Model	Pipe	Orifice		Cv value	Max Work Pressure(bar)						Coil	Power			Weight (KG)
					AC			DC				AC(50Hz)		DC	
		Bottom	Top		Air	Water	Oil	Air	Water	Oil		VA	W	W	
3N3-015-06	1/8"	1.5	1.5	0.07	10	10	7	10	10	7	D14511	20	12	12	0.45
3N3-025-06	1/8"	2.5	1.5	0.21	5	5	4	5	5	4					0.45
3N3-030-06	1/8"	3	1.5	0.23	4	4	3	4	4	3					0.45
3N3-015-08	1/4"	1.5	1.5	0.07	10	10	7	10	10	7					0.45
3N3-025-08	1/4"	2.5	1.5	0.21	5	5	4	5	5	4					0.45
3N3-030-08	1/4"	3	1.5	0.23	4	4	3	4	4	3					0.45

Overall Dimensions

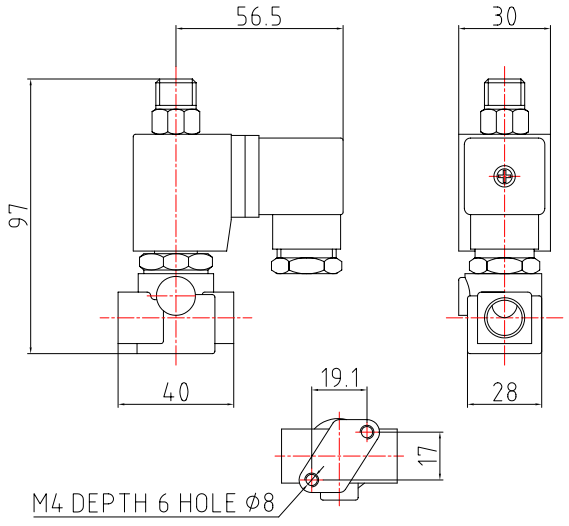

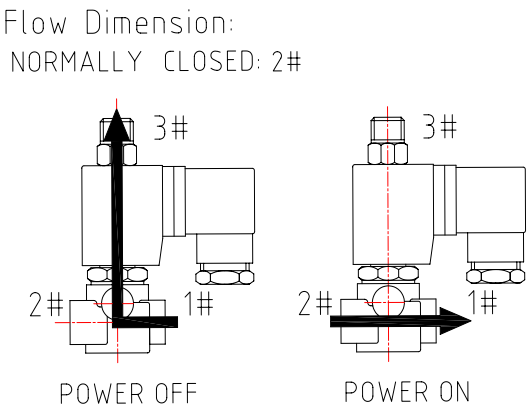

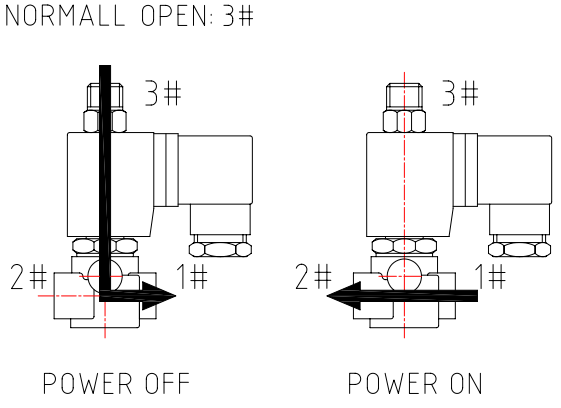

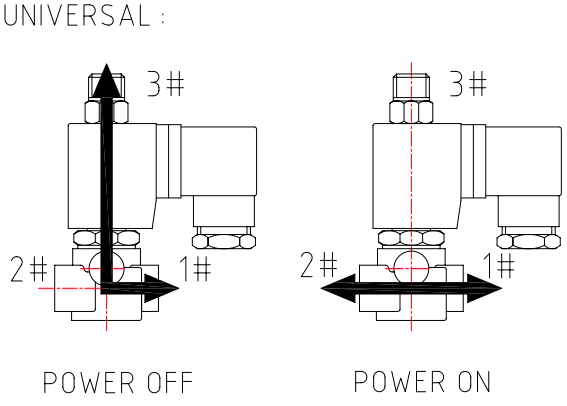

Note: All the specifications are our regular items. We can make other specifciation to meet your requirement

☎+86 574 82823826 | Fax +86 574 87157907 | sales@xhnotion.com | Web: www.xhnotion.com

SOLENOID VALVE

XST SERIES 2/3 WAY SOLENOID VALVE



Features

1. 2/3 way direct acting valve

2. Medium: air, gas

3. Working pressure: 0-16

4. Body material: brass, stainless steel

5. NBR, VITON seals are available

6. Normally closed, normally open, universal type, diverting type, etc.

Drawings

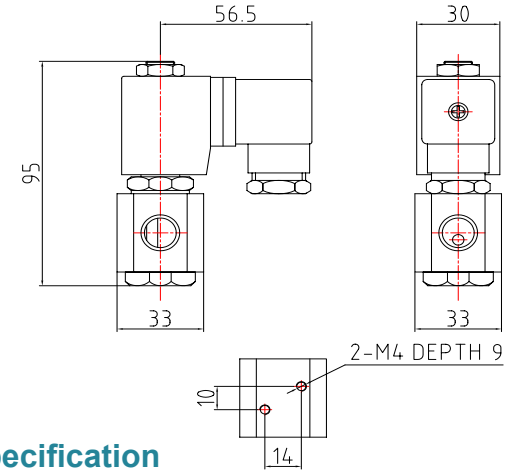

XST Series Normally Closed Specification

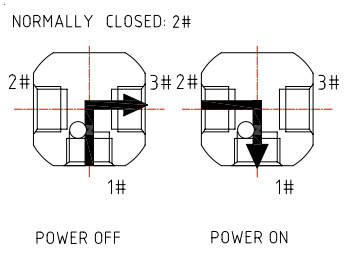

When de-energized, air flow from 1# to 3#, When energized, air flow from 2# to 1#

Model	Pipe	Orifice	Cv value	Max Work Pressure(bar)						Coil	Power		
				AC			DC				AC(50Hz)		DC
				Air	Water	Oil	Air	Water	Oil		VA	W	W
XST1-015-06	1/8"	1.5	0.07	13	13	11	13	13	11	D14511	20	12	12
XST1-025-06	1/8"	2.5	0.21	6	6	5	6	6	5				
XST1-040-06	1/8"	4	0.35	2	2	1	2	2	1				
XST1-015-08	1/4"	1.5	0.07	13	13	11	13	13	11				
XST1-025-08	1/4"	2.5	0.21	6	6	5	6	6	5				
XST1-040-08	1/4"	4	0.35	2	2	1	2	2	1				
XST1-015-06	1/8"	1.5	0.07	13	13	11	13	13	11	D16011	19	11	18
XST1-025-06	1/8"	2.5	0.21	6	6	5	6	6	5				
XST1-040-06	1/8"	4	0.35	2	2	1	2	2	1				
XST1-015-08	1/4"	1.5	0.07	13	13	11	13	13	11				
XST1-025-08	1/4"	2.5	0.21	6	6	5	6	6	5				
XST1-040-08	1/4"	4	0.35	2	2	1	2	2	1				

XST Series Normally Open Specification

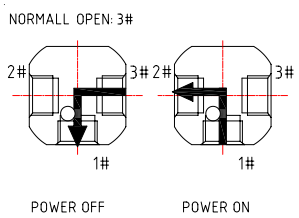

When de-energized, air flow from 3# to 1#, When energized, air flow from 1# to 2#

Model	Pipe	Orifice	Cv value	Max Work Pressure(bar)						Coil	Power		
				AC			DC				AC(50Hz)		DC
				Air	Water	Oil	Air	Water	Oil		VA	W	W
XST2-015-06	1/8"	1.5	0.07	13	13	11	13	13	11	D14511	20	12	12
XST2-025-06	1/8"	2.5	0.21	6	6	5	6	6	5				
XST2-040-06	1/8"	4	0.23	2	2	1	2	2	1				
XST2-015-08	1/4"	1.5	0.07	13	13	11	13	13	11				
XST2-025-08	1/4"	2.5	0.21	6	6	5	6	6	5				
XST2-040-08	1/4"	4	0.23	2	2	1	2	2	1				
XST2-015-06	1/8"	1.5	0.07	13	13	11	13	13	11	D16011	19	11	18
XST2-025-06	1/8"	2.5	0.21	6	6	5	6	6	5				
XST2-040-06	1/8"	4	0.23	2	2	1	2	2	1				
XST2-015-08	1/4"	1.5	0.07	13	13	11	13	13	11				
XST2-025-08	1/4"	2.5	0.21	6	6	5	6	6	5				
XST2-040-08	1/4"	4	0.23	2	2	1	2	2	1				

XST Series Universal Type Specification

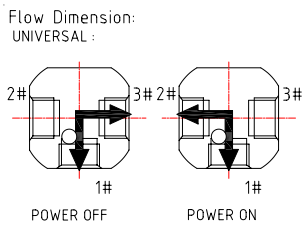

When de-energized, air flow from 3# to 1# or from 1# to 3#, When energized, air flow from 1# to 2# or from 2# to 1#.

Model	Pipe	Orifice	Cv value	Max Work Pressure(bar)						Coil	Power		
				AC			DC				AC(50Hz)		DC
				Air	Water	Oil	Air	Water	Oil		VA	W	W
XST3-015-06	1/8"	1.5	0.07	7	7	5	7	7	5	D14511	20	12	12
XST3-025-06	1/8"	2.5	0.21	3	3	2	3	3	2				
XST3-040-06	1/8"	4	0.23	1.5	1.5	1	1.5	1.5	1				
XST3-015-08	1/4"	1.5	0.07	7	7	5	7	7	5				
XST3-025-08	1/4"	2.5	0.21	3	3	2	3	3	2				
XST3-040-08	1/4"	4	0.23	1.5	1.5	1	1.5	1.5	1				
XST3-015-06	1/8"	1.5	0.07	7	7	5	7	7	5	D16011	19	11	18
XST3-025-06	1/8"	2.5	0.21	3	3	2	3	3	2				
XST3-040-06	1/8"	4	0.23	1.5	1.5	1	1.5	1.5	1				
XST3-015-08	1/4"	1.5	0.07	7	7	5	7	7	5				
XST3-025-08	1/4"	2.5	0.21	3	3	2	3	3	2				
XST3-040-08	1/4"	4	0.23	1.5	1.5	1	1.5	1.5	1				

Note: All the specifications are our regular items. We can make other specifciation to meet your requirement

☎+86 574 82823826 | Fax +86 574 87157907 | sales@xhnotion.com | Web: www.xhnotion.com



Features

1. Compact volume, large flow, widely use

2. Protection class: IP65

3. Seal material: NBR, VITON, EPDM, SILICONE

4. Body material: brass, stainless steel

5. BD - direct acting, BP - pilot operated, BT - steam valve, BH - high pressure valve, BD23 - 3 way valve

6. Some models Normally open is available

* Warning: Make sure the system is clean before installing please fix a filter in the front of solenoid valve for long life.

How to Order

BD	10	10	B	H	V

Model

BD: direct acting
BP: pilot operated
BT: steam valve
BH: high pressure valve

Orifice

01: 1mm
02: 2mm
03: 3mm
04: 4mm
05: 5mm
06: 6mm
10: 10mm
20: 20mm
25: 25mm
35: 35mm
40: 40mm
50: 50mm

Port Size

06: 1/8”
08: 1/4”
10: 3/8”
15: 1/2”
20: 3/4”
25: 1”
35: 1-1/4”
40: 1-1/2”
50: 2”

Material

Blank: Brass
B: Stainless steel
F: Flange

Acting Way

Blank: Normally closed
H: Normally open

Sealing

Blank: NBR
V: Viton
E: EPDM
S: Silicone
P: PTFE

Regular voltage : 220VAC, 110VAC, 24VDC, 12VDC, Other voltages are also customerized as requested

BD Series Compact Solenoid Valve



BD0106



BD0308B

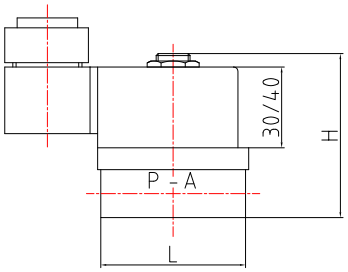

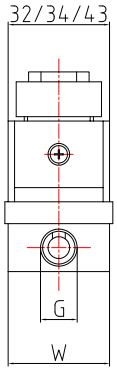

MODEL		Orifice (mm)	Thread (G)	Working Pressure	Medium Temp.	Seals Material	CV Value	Voltage	L	W	H
Brass	SS304								mm	mm	mm
BD0106	BD0106B	1	G1/8	0-40 bar	0 ～ 80℃	Regular seal:NBR Viton EPDM	0.06	220VAC 110VAC 24VDC 12VDC make Other voltage as requested	32	32	66
BD0206	BD0206B	2	G1/8	0-16 bar			0.14		32	32	66
BD0306	BD0306B	3	G1/8	0-10 bar			0.27		32	32	66
BD0208	BD0208B	2	G1/4	0-16 bar			0.14		32	32	66
BD0308	BD0308B	3	G1/4	0-10 bar			0.27		32	32	66
BD0408	BD0408B	4	G1/4	0-6 bar			0.35		32	32	66
BD0608	BD0608B	6	G1/4	0-2 bar			0.64		50	38	85
BD0610	BD0610B	6	G3/8	0-2 bar			0.64		50	38	85
BD0615	BD0615B	6	G1/2	0-2 bar			0.64		50	38	85

BD Series Direct Acting Solenoid Valve



BD1010



BD1015B

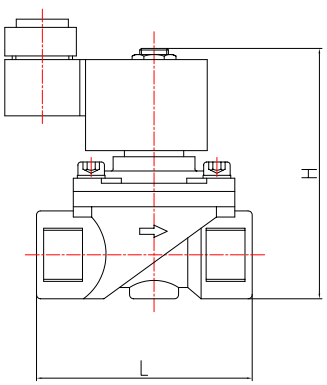

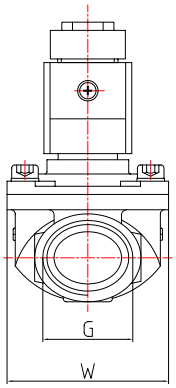

MODEL		Orifice (mm)	Thread (G)	Working Pressure	Medium Temp.	Seals Material	CV Value	Voltage	L	W	H
Brass	SS304								mm	mm	mm
BD1008	BD1008B	10mm	G1/4	0-10 Bar	-10~80℃	Regular seal:NBR Viton EPDM	2.3	220VAC 110VAC 24VDC 12VDC make Other voltage as requested	50	32	84
BD1010	BD1010B		G3//8						50	32	84
BD1015	BD1015B		G1/2						50	32	84
BD1408	BD1408B	14mm	G1/4				4.2		65	41	98
BD1410	BD1410B		G3//8						65	41	98
BD1415	BD1415B		G1/2						65	41	101
BD1420	BD1420B		G3/4						69	41	104
BD2020	BD2020B	20mm	G3/4				10		92	60	114
BD2025	BD2025B		G1						92	60	114

☎+86 574 82823826 | Fax +86 574 87157907 | sales@xhnotion.com | Web: www.xhnotion.com

BP Series Pilot Operated Solenoid Valve



BP5050



BP5050B

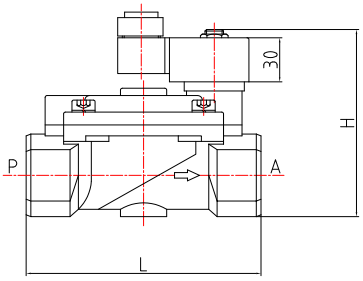

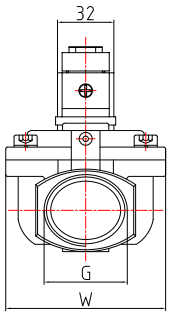

MODEL		Orifice (mm)	Thread (G)	Working Pressure	Medium Temp.	Seals Material	CV Value	Voltage	L	W	H
Brass	SS304								mm	mm	mm
BP1008	BP1008B	10mm	G1/4	0.3-10 Bar	-10~80℃	Regular seal:NBR Viton EPDM	2.3	220VAC 110VAC 24VDC 12VDC make Other voltage as requested	50	32	84
BP1010	BP1010B		G3/8						50	32	84
BP1015	BP1015B		G1/2						50	32	84
BP1415	BP1415B	14mm	G1/2				4.7		67	40.5	92
BP1420	BP1420B		G3/4						67	40.5	92
BP2020	BP2020B	20mm	G3/4	0.3-16 Bar			5.8		85	50	92.5
BP2025	BP2025B		G1						100	60	107
BP4035	BP4035B	40mm	G1-1/4	0.5-16 Bar			23.3		135	92	143
BP4040	BP4040B		G1-1/2						135	92	143
BP5050	BP5050B	50mm	G2				46.7		160	109	161

BT Series Steam Solenoid Valve



BT1315

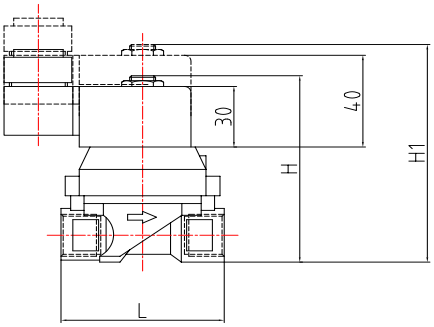

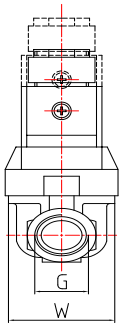

MODEL	Orifice (mm)	Pipe Thread	Working Pressure	Medium Temp.	Seals Material	Body Material	CV Value	Voltage	L	W	H
									mm	mm	mm
BT1308	13	G1/4	0.5-16 Bar	-10~180℃	PTFE	Brass	4.2	220VAC 110VAC 24VDC make Other voltage as requested	72	32	97
BT1310	13	G3/8					4.2		72	32	97
BT1315	13	G1/2					4.2		72	32	97
BT1408	14	G1/4	0-10 Bar				4.7		92	60	128
BT1410	14	G3/8					4.7		92	60	128
BT1415	14	G1/2					4.7		125	92	173
BT2020	20	G3/4	0.5-16 Bar				5.8		125	92	173
BT2525	25	G1					11.7		129	92	186

BH Series High Pressure Solenoid Valve



BH1315

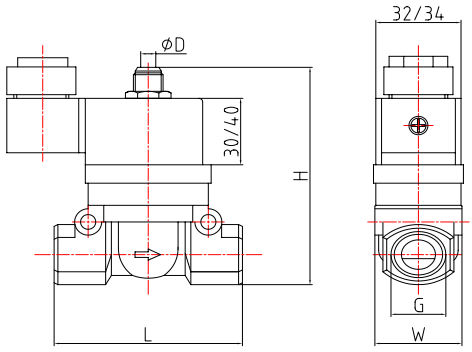

MODEL	Orifice (mm)	Pipe Thread	Working Pressure	Medium Temp.	Seals Material	Body Material	CV Value	Voltage	L	W	H
									mm	mm	mm
BH1308	13	G1/4"	3~50 Bar	-10 ～ 80℃	PTFE, NBR	Brass	4.2	220VAC 110VAC 24VDC make Other voltage as requested	72	32	97
BH1310	13	G3/8"	3~50 Bar				4.2		72	32	97
BH1315	13	G1/2"	3~50 Bar				4.2		72	32	97
BH2020	20	G3/4"	3-40 Bar				5.8		92	60	128
BH2525	25	G1"	3-40 Bar				11.7		92	60	128

0927 Series Solenoid Valve



0927200

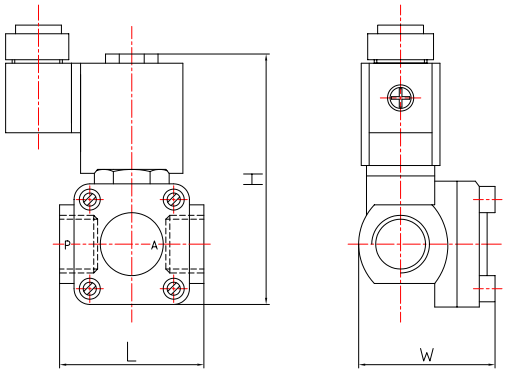

MODEL	Orifice (mm)	Pipe Thread	Working Pressure	Medium Temp.	Seals Material	Body Material	CV Value	Voltage	L	W	H
0927000	14	G1/4	0.3-16 Bar	-10 ～ 80℃	NBR EPDM VITON	Brass	4.7	220VAC 110VAC 24VDC make Other voltage as requested	45	53	
0927100	14	G3/8					4.7		45	53	
0927200	14	G1/2					4.7		45	53	
0927300	20	G3/4	0.5-16 Bar				5.8		65	86	
0927400	20	G1					5.8		65	86	
0927500	40	G11/4	0.7-16 Bar				23.3		95	132	
0927600	40	G11/2					23.3		95	132	
0927700	50	G2					46.7		112	160	

☎+86 574 82823826 | Fax +86 574 87157907 | sales@xhnotion.com | Web: www.xhnotion.com

B23 Series 3 Way Solenoid Valve



BD0106



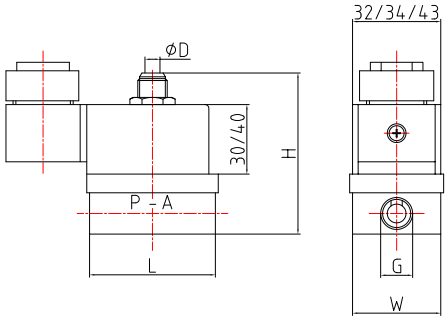

Model	Orifice		Thread	Working Pressure(Mpa)		Medium Temp.	Voltage	L	W	H
	Body	Top	G / NPT	AC	DC			mm	mm	mm
BD23-1.5-06	1.5	1.2	1/8"	0-1.6	0-1	-10~80℃	24VAC	32	32	75
BD23-2-06	2	1.2	1/8"	0-1	0-0.7	-10~80℃	110VAC	32	32	75
BD23-2.5-06	2.5	1.2	1/8"	0-0.6	0-03	-10~80℃	220VAC	32	32	75
BD23-1.5-08	1.5	1.2	1/4"	0-1.6	0-1	-10~80℃	12VDC	46	32	70
BD23-2-08	2	1.2	1/4"	0-1	0-0.7	-10~80℃		46	32	70
BD23-2.5-08	2.5	1.2	1/4"	0-0.6	0-03	-10~80℃		46	32	70

Ex-proof Coil

Ex-proof coils are the most important valve accessories of the ex-proof valve and it is widely used in the dangerous environment and we have got CNEX certificate.

Surrounding temperature: -20 ℃ to 40 ℃
Temperature size < 80 ℃
Cable length: 1.5 m
Three wires, black color or yellow&green color is ground wire.



Model		Certificate NO.	Orifice Φ	Power consumption (W)							
DC	AC		mm	220V	127V	110V	36V	24V	110V	24V	12V
Explosion proof marks Ex mb I Mb/Ex mb II T4 Gb											
0950	0951	CNEx13.2299X	9.2	6.5	6.2	6	6.5	6	3.1	4.5	4.5
1250	1251	CNEx13.2302X	12	12	13	13	15	15	10	14.5	10.5
1450	1451	CNEx13.2298X	14.5	20	19	18.5	15.5	15	14.5	16.5	15
1650	1651	CNEx13.3988X	16.3	32	23.5	22	15	12	17	14	18

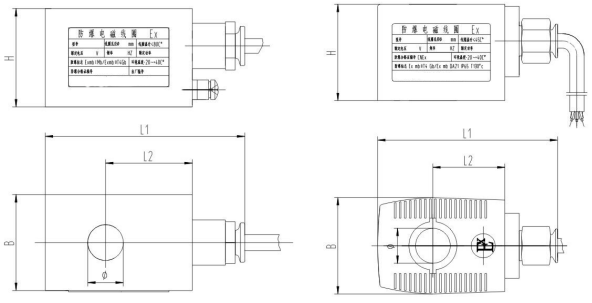

Dimension (mm)			
H	B	L1	L2
30	27	67.5	32.5
30	37	80	36.5
40	39	81.5	35.5
40	48	85.5	35.5

SOLENOID VALVE

BA Series Pneumatic Angle Valve

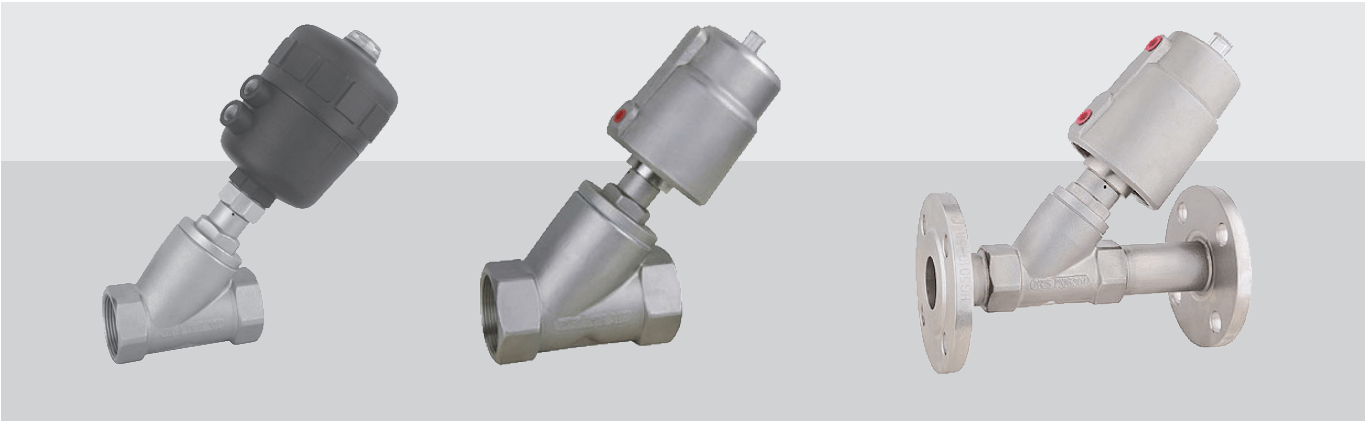

Features

1. Y-shape enlarge the flowing section, which raise the flow more by 30%.

2. Valve stem is SS316L material, with strong anti-corrosive ability. PTFE seals with wedge shape helps the stem adjust automatically and maintaince free.

3. Actuator material: PA66, Aluminum, SS304.

4. Valve body material: SS304, SS316

5. Control medium: neutral air, Controlling pressure: 3-8 bar.

6. Fluid pressure: Max 16 bar.

7. Fluid Temperature: -10~180℃ .

8. Working type: Double acting, Single acting.

Normally closed and normally open are both available for double acting and single acting

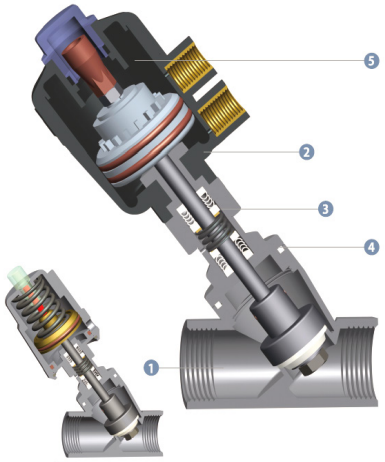

How to Order

BA	40	15	—	40	S	S	FC
Model	Working Type	Port Size		Actuator Bore	Valve Material	Actuator Material	Valve Shape

Model

BA:
2 way pneumatic valve

KBA:
2 way normally open

BZ:
3 way valve

Working Type

40: Double acting
50: Single acting

Port Size

10: 3/8”
15: 1/2”
20: 3/4”
25: 1”
32: 1-1/4”
40: 1-1/2”
50: 2”
65: 2-1/2"
80:3"

Actuator Bore

40: 40mm
50: 50mm
63: 63mm
80: 80mm
100: 100mm
125:125mm

Valve Material

S: SS304
S1: SS316

Actuator Material

S: SS304
P: Plastic
A:Aluminum

Valve Shape

Blank: thread
FC: clamp
FB: flange
AT: angle thread
AF: angle flange
AC: angle clamp

☎+86 574 82823826 | Fax +86 574 87157907 | sales@xhnotion.com | Web: www.xhnotion.com

Normally Closed

Model		Actuator	Orifice	CV Value	Pipe Thread	Working Pressure	Control Pressure	Medium Temp.
Double acting	Single Acting	mm	mm	m3/h	G	Mpa	Mpa	℃
BA4010-40	BA5010-40	40	13	4.7	3/8"			
BA4010-50	BA5010-50	50	13	4.7	3/8"			
BA4015-40	BA5015-40	40	13	4.7	1/2"			
BA4015-50	BA5015-50	50	13	4.7	1/2"			
BA4020-50	BA5020-50	50	20	9.5	3/4"			
BA4025-50	BA5025-50	50	25	22	1"			
BA4025-63	BA5025-63	63	25	22	1"			
BA4032-63	BA5032-63	63	32	32	1-1/4"			
BA4032-80	BA5032-80	80	32	32	1-1/4"	0-1.6	0.3~0.8	-10~180℃
BA4040-63	BA5040-63	63	40	41	1-1/2"			
BA4040-80	BA5040-80	80	40	41	1-1/2"			
BA4050-63	BA5050-63	63	50	57	2"			
BA4050-80	BA5050-80	80	50	57	2"			
BA4065-80SS	BA5065-80SS	80	65					
BA4065-100SS	BA5065-100SS	100	65					
BA4065-125SS	BA5065-125SS	125	65					
BA4080-125SS	BA5080-125SS	125	80					

Normally Open

Model		Actuator	Orifice	CV Value	Pipe Thread	Working Pressure	Control Pressure	Medium Temp.
Double acting	Single Acting	mm	mm	m3/h	G	Mpa	Mpa	℃
KBA4010-50	KBA5010-50	50	13	4.7	3/8"			
KBA4015-50	KBA5015-50	50	13	4.7	1/2"			
KBA4020-50	KBA5020-50	50	20	9.5	3/4"			
KBA4025-63	KBA5025-63	63	25	22	1"	0-1	0.4~0.6	-10~180℃
KBA4032-80	KBA5032-80	80	32	32	1-1/4"			
KBA4040-80	KBA5040-80	80	40	41	1-1/2"			
KBA4050-100	KBA5050-100	100	50	57	2"			

* The datas are just for your reference, we can revise the design to reach your requirements

Install Direction

1. Downstream installing can get the largest working pressure, detailed specification as above.

2. Upstream installing is permitted for single acting and double acting. For exact pressure, please inquire us.

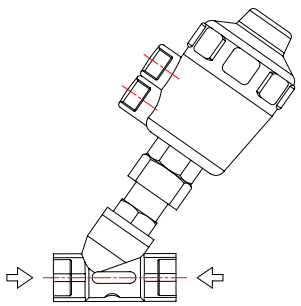

Upstream installing

Down stream installing

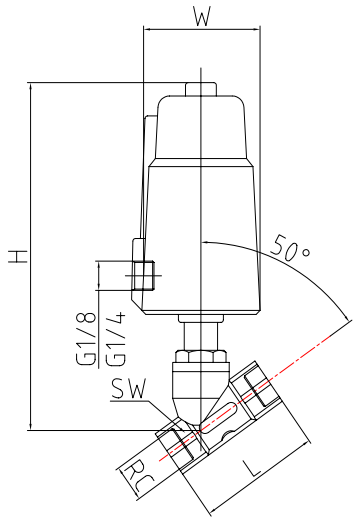

Stainless steel actuator drawings

Model	RC	L	L1	SW	H	W
BA4010-40SS	3/8"	55	17	21	120	51
BA4015-40SS	1/2"	70	21	26.5	138	51
BA4020-50SS	3/4"	76	23	32	154	62
BA4025-50SS	1"	90	25	40	168	62
BA4032-63SS	1-1/4"	116	32	50	200	76
BA4040-80SS	1-1/2"	116	32	55.5	215	92
BA4050-80SS	2"	138	40	68.5	230	92
BA4065-100SS	2-1/2"	168	51	85	305	117
BA4080-125SS	3"	192	54	100	365	140

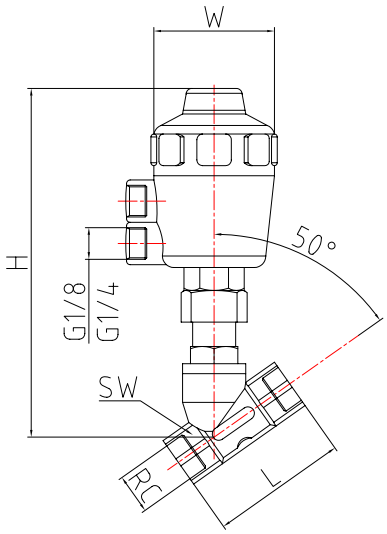

Plastic actuator drawings

Model	RC	L	L1	SW	H	W
BA4010-50SP	3/8"	55	17	21	120	54
BA4015-50SP	1/2"	70	21	26.5	135	63
BA4020-50SP	3/4"	76	23	32	145	63
BA4025-50SP	1"	90	25	40	155	63
BA4032-63SP	1-1/4"	116	32	50	200	81
BA4040-80SP	1-1/2"	116	32	55.5	230	96
BA4050-80SP	2"	138	40	68.5	250	96

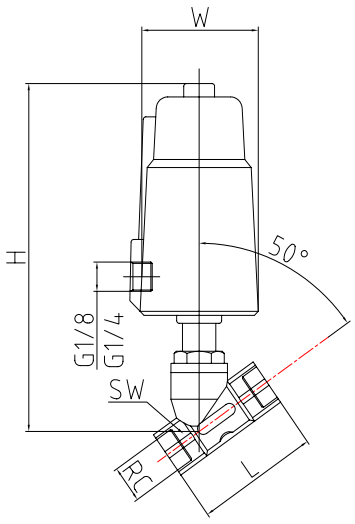

Aluminium actuator drawings

Model	RC	L	L1	SW	H	W
BA4010-40SA	3/8"	55	17	21	120	51
BA4015-40SA	1/2"	70	21	26.5	138	51
BA4020-50SA	3/4"	76	23	32	154	62
BA4025-50SA	1"	90	25	40	168	62
BA4032-63SA	1-1/4"	116	32	50	200	76
BA4040-80SA	1-1/2"	116	32	55.5	215	92
BA4050-80SA	2"	138	40	68.5	230	92
BA4065-100SA	2-1/2"	168	51	85	305	117
BA4080-125SA	3"	192	54	100	365	140

☎+86 574 82823826 | Fax +86 574 87157907 | sales@xhnotion.com | Web: www.xhnotion.com

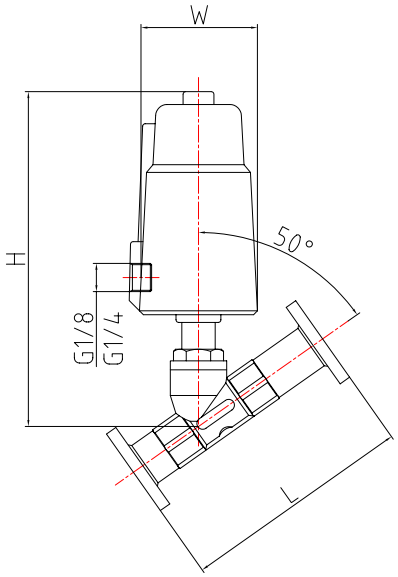

2 way clamp connection drawings

Model	L	H
BA4015-40SS-FB	172	170
BA4020-50SS-FB	182	185
BA4025-50SS-FB	196	195
BA4032-63SS-FB	228	235
BA4040-80SS-FB	228	250
BA4050-80SS-FB	250	265
BA4065-100SS-FB	295	305
BA4080-125SS-FB	320	365



Sanitary clamp pneumatic angle valve

Fast installation

No fluid left to keep clean

Typical Applications

Steam Applications

Air Drying Equipment

Sterilizers

Autoclaves

Process Control Applications

Laundry Equipment

Textile Dyeing & Drying

Bottling & Dispensing Equipment

Ink & Paint Dispensing

Industrial Compressors

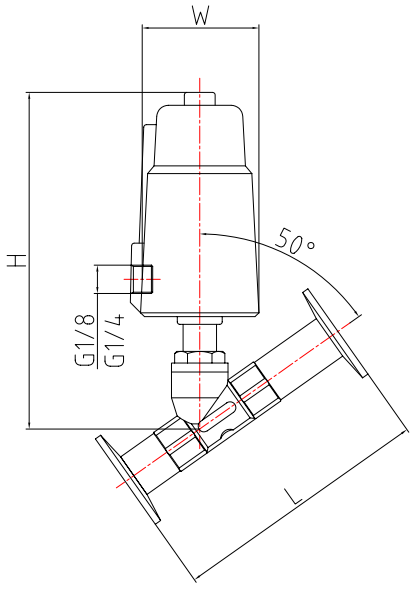

Sanitary clamp drawings

Model	L	H
BA4015-40SA-FC	110	170
BA4020-50SA-FC	116	185
BA4025-50SA-FC	130	195
BA4032-63SA-FC	156	235
BA4040-80SA-FC	156	250
BA4050-80SA-FC	178	265
BA4065-100SA-FC	207	305
BA4080-125SA-FC	231	365

SOLENOID VALVE

BA Series Pneumatic Angle Valve





Features

1. Function: 3 way valve
2. Working pressure: 1.6 Mpa
3. Control pressure: 0.4~0.6 Mpa
4. Fluid Temperature: -10~180℃
5. Valve body: SS304

Flow chart

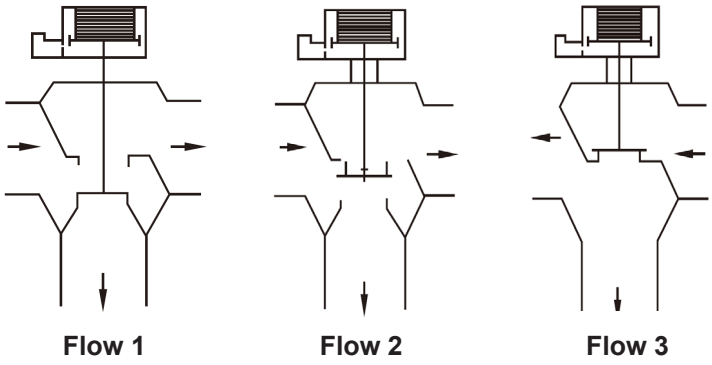

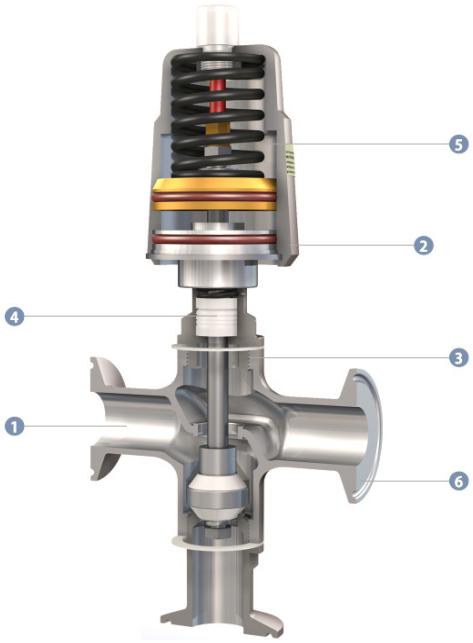

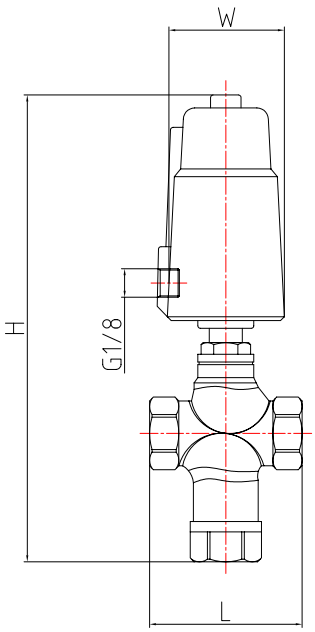

Drawings

Model	G	H	L	DN
BZ4015-50	1/2"	172	74	15
BZ4020-50	3/4"	172	74	20
BZ4025-50	1"	180	92	25
BZ4032-80	1-1/4"	232	120	32
BZ4040-80	1-1/2"	232	120	40

☎+86 574 82823826 | Fax +86 574 87157907 | sales@xhnotion.com | Web: www.xhnotion.com

SOLENOID VALVE

BA Series Pneumatic Angle Valve



Applicable medium: water, neutral gas or liquid, allohol, oil,organic solvent,steam,lye and weak acid solution solvent, steam.

Other Valves









Features

Body material: SS316/SS304

Actuator material: alloy aluminum/SS304

Disk seal: PTFE/FPM

Stem seal: PTFE/FPM

Piston seal: FPM/NBR

Connection size: DN10-DN65

Thread: 3/8"-21/2"

Drawings

Model	H	L
BA4015-40SA-AT	48	162
BA4020-50SA-AT	48	162
BA4025-50SA-AT	56	178
BA4032-63SA-AT	77	210
BA4040-80SA-AT	77	210

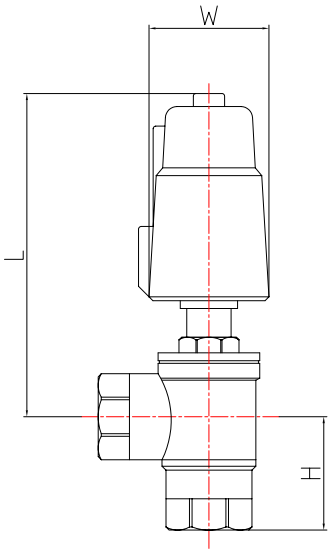

SOLENOID VALVE

Solenoid Pulse Jet Valve

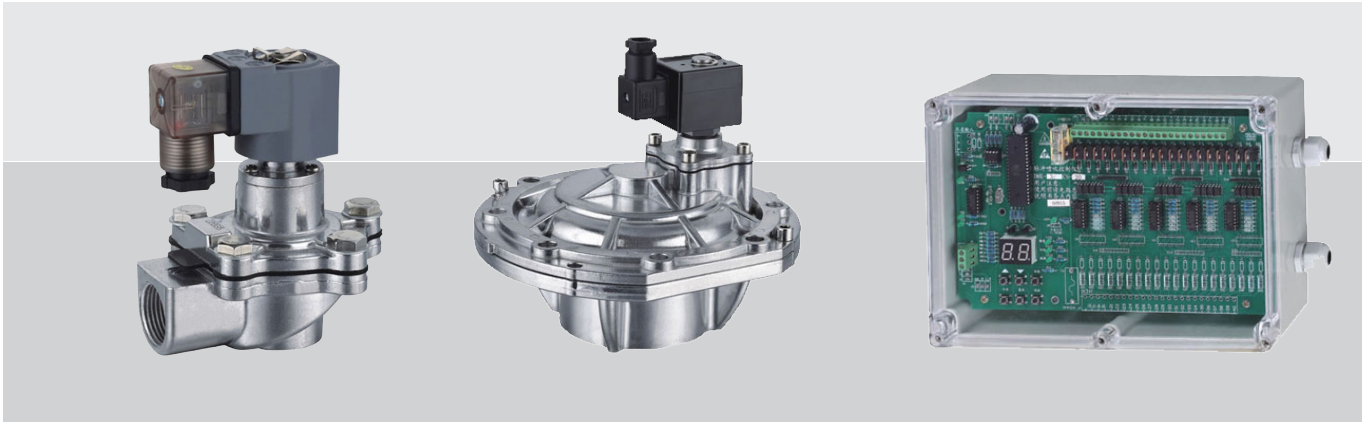

FEATURES

1. Reverse pulse jet valves including right angle style and embedded pulse valve style, including single diaphragm and double diaphragm,

2. Port Size: 1", 1-1/2", 2", 2-1/2" 3", 4"

3. Working pressure: 0.4-0.6 Mpa

4. Media temperature: -20~80 Celsius degree

5. Voltage: 12VAC, 24VAC ,36VAC,48VAC,110VAC, 220VAC ,380V, DC24V and AC220V as regular

6. Body material: aluminum

7. Diaphragm life: 1 Million cycles or 3 years.

WORKING PRINCIPLE

Solenoid pulse diaphragm valve is composed of two air cells. When the compressed air connects with the valve, it comes into air cell at the rear firstly through the inlet orifice. Then the pressure pushes the diaphragm closely against the outlet port of the valve to make the valve closed.

When the valve receives the signal from control device, it moves the armature and exhaust orifice of air cell at the rear is open, the air cell loses pressure quickly. The diaphragm returns back under the push of compressed air. The valve is open, compressed air blows by the valve.

When signal disappears, armature returns to initial position, escape orifice is closed. The pressure of the air cell at the rear recovers, and push the diaphragm against the outlet port closed again, the valve is closed.

How to Order

AMCF	—	ZM	—	50	S
Model		Shape		Port Size	Seal Number
AMCF BMCF CMCF		Blank: right angel valve ZM: angle with screw nut Y: embedded pulse valve		15: 1/2” 20: 3/4” 25: 1” 32: 1-1/4” 40: 1-1/2” 50: 2” 62: 2-1/2" 76:3"	Blank: Single seal S: Double seals

☎+86 574 82823826 | Fax +86 574 87157907 | sales@xhnotion.com | Web: www.xhnotion.com

AMCF-15~AMCF-76S SERIES (GOYEN TYPE)





Model	Medium	Inlet Thread Size	Outlet Connection	Orifice (mm)	Diaphram Number	Surrouding Temp.	Working Pressure	Body Material
AMCF-15	Compressed clean air	G1/2"	G1/2"	15	1	-25~55℃	0.4-0.6 Mpa	Aluminum
AMCF-20		G3/4"	G3/4"	20	1			
AMCF-25		G1"	G1"	25	1			
AMCF-35S		G1-1/2"	G1-1/2"	35	2			
AMCF-40S		G1-1/2"	G1-1/2"	40	2			
AMCF-50S		G2"	G2"	50	2			
AMCF-62S		G2-1/2"	G2-1/2"	62	2			
AMCF-76S		G3"	G3"	76	2			

DRAWINGS

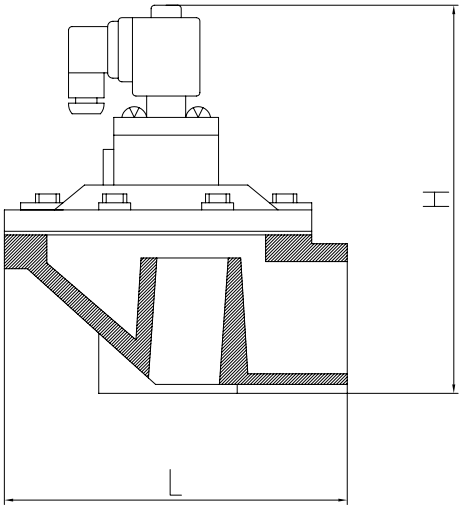

MODEL	L	H
AMCF-15	101	124
AMCF-20	101	124
AMCF-25	110	125
AMCF-35S	140	142
AMCF-40S	140	170
AMCF-50S	210	200
AMCF-62S	210	225
AMCF-76S	217	254

AMCF-Y-50S~AMCF-Y-76S SERIES (GOYEN TYPE)



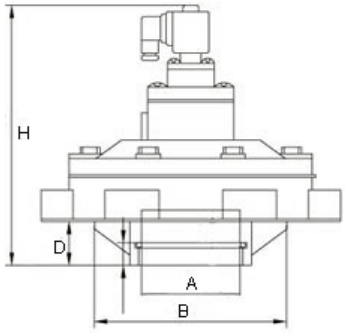

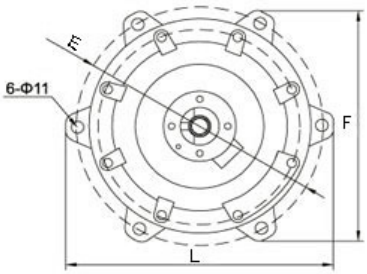

Model	Medium	Inlet Thread Size	Outlet Connection	Orifice (mm)	Diaphram Number	Surrouding Temp.	Working Pressure	Body Material
AMCF-Y-50S	Compressed clean air	G2"	60	50	2	-25~55℃	0.2-0.6 Mpa	Aluminum
AMCF-Y-62S		G2-1/2"	75	62	2			
AMCF-Y-76S		G3"	89	76	2			

Model (mm)	A	B	H	D	E	F	L
AMCF-Y-50S	60	118	188	31	180	178	202
AMCF-Y-62S	75	145	196	35	208	202	230
AMCF-Y-76S	89	142	200	35	226	219	249

AMCF-ZM-25, AMCF-ZM-45S SERIES (GOYEN TYPE)



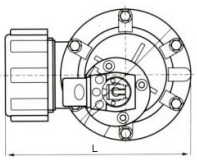

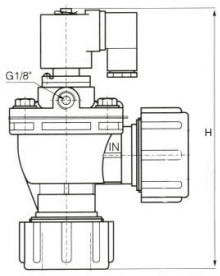

Model	L	H
AMCF-ZM-25	131	189
AMCF-ZM-45S	179.5	237

Model	Medium	Inlet Thread Size	Outlet Connection	Orifice (mm)	Diaphram Number	Surrouding Temp.	Working Pressure	Body Material
AMCF-ZM-25	Compressed clean air	35	35	25	1	-25~55℃	0.4-0.6 Mpa	Aluminum
AMCF-ZM-45S		50	50	45	2			

☎+86 574 82823826 | Fax +86 574 87157907 | sales@xhnotion.com | Web: www.xhnotion.com

BMCF SERIES (ASCO TYPE)





Model	Medium	Inlet Thread Size	Outlet Connection	Orifice (mm)	Diaphram Number	Surrouding Temp.	Working Pressure	Body Material
BMCF-20	Compressed clean air	G3/4"	G3/4"	20	1	-25~55℃	0.4-0.6 Mpa	Aluminum
BMCF-25		G1"	G1"	25	1			
BMCF-40S		G1-1/2"	G1-1/2"	40	2			
BMCF-62S		G2-1/2"	G2-1/2"	62	2			

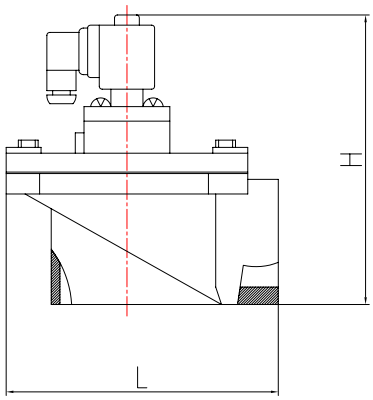

Model	L	H
BMCF-20	88	112
BMCF-25	88	112
BMCF-40S	130	160
BMCF-62S	168	206

Model	Medium	Inlet Thread Size	Outlet Connection	Orifice (mm)	Diaphram Number	Surrouding Temp.	Working Pressure	Body Material
BMCF-Y-76S	Compressed clean air	G3"	88	76	2	-25~55℃	0.2-0.6 Mpa	Aluminum

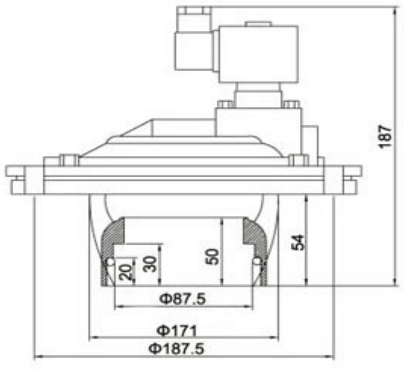

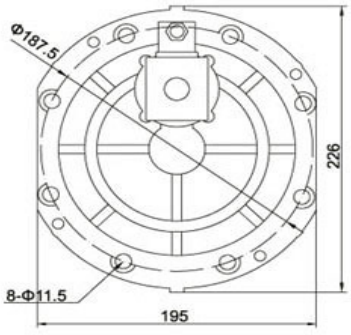

SOLENOID VALVE

Solenoid Pulse Jet Valve

CMCF SERIES (XHNOTION TYPE)





Model	Medium	Inlet Thread Size	Outlet Thread Size	Orifice (mm)	Diaphram Number	Surrouding Temp.	Working Pressure	Body Material
CMCF-20	Compressed clean air	G3/4"	G3/4"	20	1	-25~55℃	0.4-0.6 Mpa	Aluminum
CMCF-25		G1"	G1"	25	1			
CMCF-40S		G1-1/2"	G1-1/2"	40	2			
CMCF-50S		G2"	G2"	50	2			
CMCF-62S		G2-1/2"	G2-1/2"	62	2			
CMCF-76S		G3"	G3"	76	2			
CMCF-20L		G3/4"	27mm	20	1			
CMCF-76S		G3"	G3"	76	2			
CMCF-20L		G3/4"	27mm	20	1			

DRAWINGS

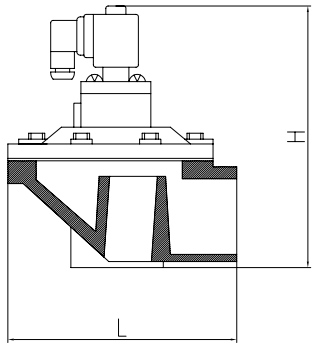

Model (mm)	L	H	A	B
CMCF-20	88	128	48	20
CMCF-25	108	136	60	23
CMCF-40S	131	184	75	32
CMCF-50S	180	206	100	43
CMCF-62S	204	226	110	49
CMCF-76S	220	254	120	99
AMCF-62S	210	225	115	48
AMCF-76S	217	254	117	66

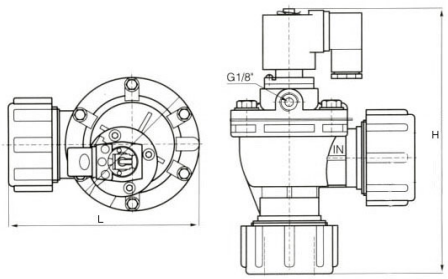

Model (mm)	L	H
CMCF-ZM-20	119	168
CMCF-ZM-25	140	192
CMCF-ZM-40S	166	242

Model	Medium	Inlet	Outlet	Orifice (mm)	Diaphram Number	Surrouding Temp.	Working Pressure	Body Material
CMCF-ZM-20	Compressed clean air	27mm	27mm	20	1	-25~55℃	0.4-0.6 Mpa	Aluminum
CMCF-ZM-25		34mm	34mm	25	1			
CMCF-ZM-40S		48mm	48mm	40	2			

☎+86 574 82823826 | Fax +86 574 87157907 | sales@xhnotion.com | Web: www.xhnotion.com

SOLENOID VALVE

Solenoid Pulse Jet Valve



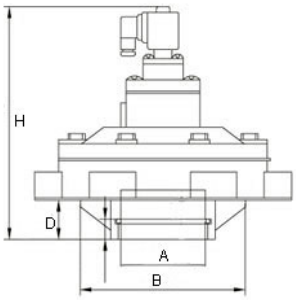

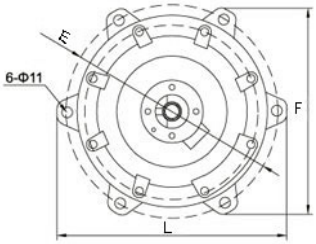

Model	Medium	Inlet thread size	Outlet thread size	Orifice (mm)	Diaphram number	Surrouding temp.	Working Pressure	Body Material
CMCF-Y-25	Compressed clean air	G1"	G1"	25	1	-25~55℃	0.2-0.6 Mpa	Aluminum
CMCF-Y-40S		G1-1/2"	G1-1/2"	40	2			
CMCF-Y-50S		G2"	60mm	50	2			
CMCF-Y-62S		G2-1/2"	75mm	62	2			
CMCF-Y-76S		G3"	89mm	76	2			

SIGNAL CONTROLLER



Model	MCY-20L
Input Voltage	AC110VAC, 220VAC
Output Voltage	DC24V, AC110VAC, 220VAC
Output Currency	1A
Power Consumption	5W
Interval Time Range	1-250s
On Time Range	30ms-2500ms
Output Line No.	1-20 lines
Working Environment	-25~60 ℃
Weight & Dimensions	0.8kgs, 160x120x80mm

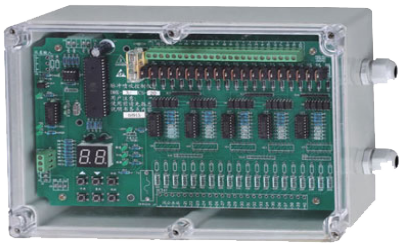

Model	MCY-64
Input Voltage	AC110VAC, 220VAC
Output Voltage	DC24V, AC110VAC, 220VAC
Output Currency	1A
Power Consumption	5W
Interval Time Range	1-250s
On Time Range	30ms-2500ms
Output Line No.	1-64 lines
Working Environment	-25~60 ℃
Weight & Dimensions	1.8kgs, 248X188X105mm, 222X145X75 (8 LINES)

SOLENOID VALVE

XL Series Customized Solenoid Valve



2/2 way, normally close, direct action, design for use with steam, water and air in general.

Steam Valve

XL-01 Series Specifications

Port Size:	Female G 1/4”
Body Material:	Brass
Seal Ring Material:	FKM, PTFE
Max Media Temperature:	180℃
Voltage Available:	DC 12V; DC 24V, 12VAC;24VAC;110/120VAC; 220/230VAC
Power	DC12W/AC15VA
Inner Orifice	2.7mm
Working Pressure	0-8 bar
Protection Class	IP65
Insulation class	H Class

DRAWINGS

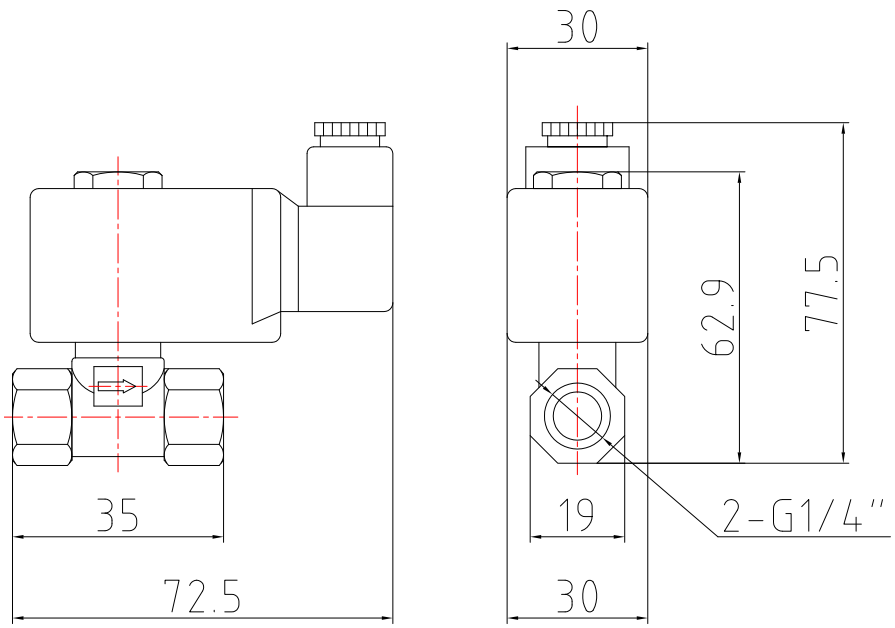

Other Models Recommended



XL-02

2/2 way, G1/4"



XL-03

2/2 way, G1/8" & 6mm



XL-04

2/2 way, G1/8",angle 90



XL-05

2/2 way, G1/8", G1/2"



XL-08

2/3 way, G1/8"

☎+86 574 82823826 | Fax +86 574 87157907 | sales@xhnotion.com | Web: www.xhnotion.com

SOLENOID VALVE

XL Series Customized Solenoid Valve



2/2 way, normally close, direct action, design for use with steam, water and air in general.

Flow Control Steam Valve

Features

1. Installed on the ironing equipments independant.
2.Fully made of high temperature H class material
3. Steam flow rate can be adjustable, easy to operate.
4. Excellet performance for water proof.
5. Straight shape, angle shape, all kinds of connections are available.
6. Conforming to CE certificate.

XL-06 Series Specifications

Port Size:	Female G 1/4”
Body Material:	Brass
Seal Ring Material:	FKM, PTFE
Max Media Temperature:	180℃
Voltage Available:	DC 12V; DC 24V, 12VAC;24VAC;110/120VAC; 220/230VAC
Power	DC12W/AC15VA
Inner Orifice	2.5 mm
Working Pressure	0-8 bar
Protection Class	IP65
Insulation class	H Class

DRAWINGS

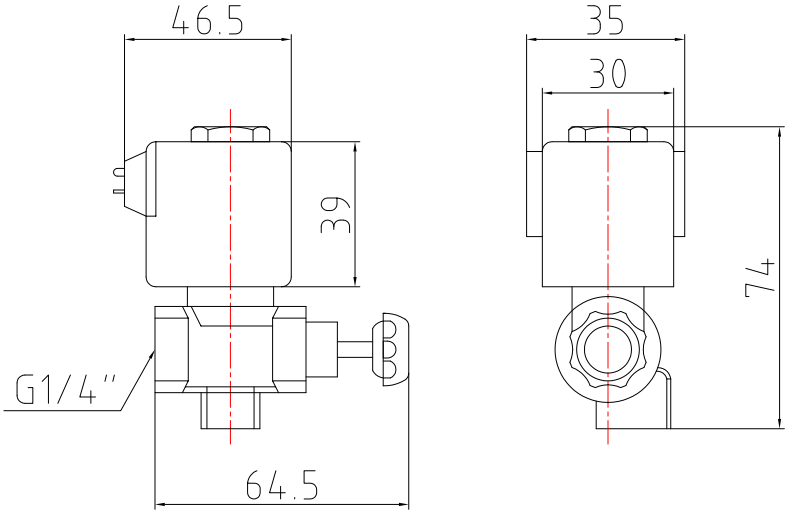

SOLENOID VALVE

BI-STABLE SOLENOID VALVE

Bi-stable solenoid valve is also named latching solenoid valve. It includes a set of permanent magnets that allow the solenoid to offer hold force even after the power is off. The term Bi-stable is given to this type of solenoid because it has two stable positions. The first when the solenoid de-energized and plunger is fully extended and second when the solenoid is de-energized and the plunger is held in position by the permanent magnets. The electromechanical force moves the solenoids from one stable position to the other depending of the polarity of power applied. A spring can be used to move the plunger out to the extended position as the charge applied only neutralises the permanent magnet force. Solenoids can only induced electromechanical force in one direction (pulling the plunger towards the endstop). when the polarity is reversed, it has no effect on the plunger except to neutralise the magnets.

FEATURES

· No self heating
· Continues to hold even after the power is disconnected
· Can operate by a pulse signal
· A charge / discharge of capacitor will be enough to set and reset

HOW TO INSTALL

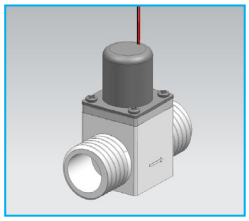

RED LINE CONNECT POSITIVE POLE
BLACK LINE CONNECT NEGATIVE POLE

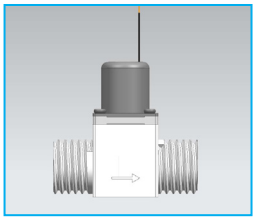

INSTALL AS ARROW

SPECIFICATION

Model	2MP
Rated Voltage	DC 3V, 4.5V, 6V, 12V for 1/2 1/4; 4.5V, 6V for 3/4
Coil Resistance	9Ω±1Ω (20℃)
Function	Pilot operated
Impulse Width	10ms-30ms
Working Pressure	0.05 Mpa-0.8 Mpa Max pressure: 1Mpa
Medium Temperature	0-60℃
Reaction Time	open≤0.15s close≤0.5s
Electric Strength	Between conductor and nonconductor, shall be no puncture and spark in one minute under the condition of AC 1000V voltage.
Insulation Capability	over 100M between conductor and nonconductor.
Flow Capability	0.05Mpa≥5L/min, 0.3Mpa≥20L/min, 0.8Mpa≥28L/min
Working Life	more than 500,000 cycles

☎+86 574 82823826 | Fax +86 574 87157907 | sales@xhnotion.com | Web: www.xhnotion.com

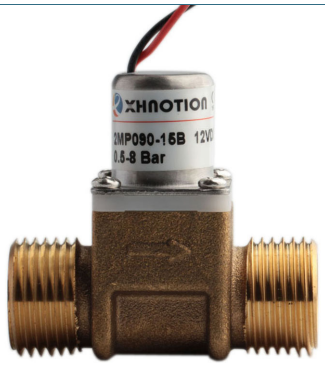

2MP090-15B, BRASS MATERIAL

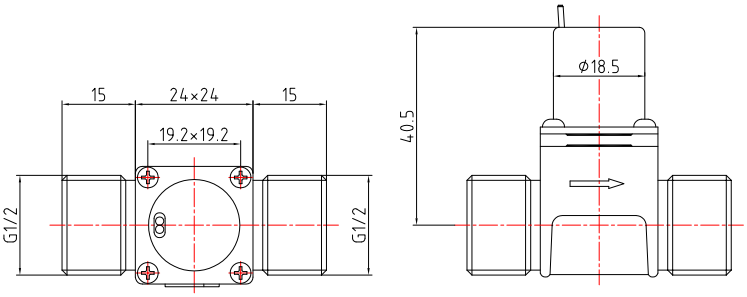

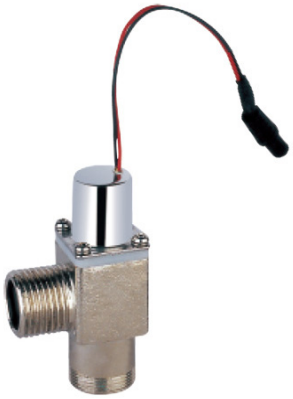

2LP090-15B, BRASS MATERIAL

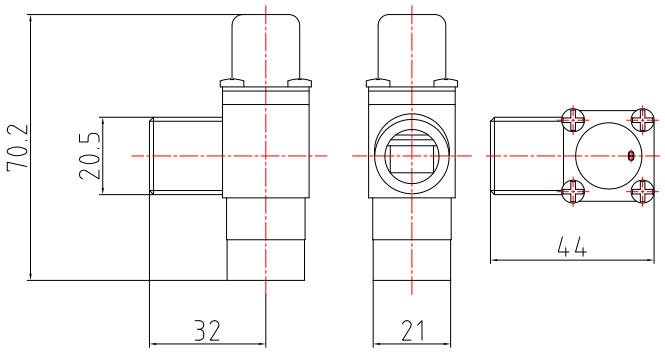



2LP090-15, POM MATERIAL

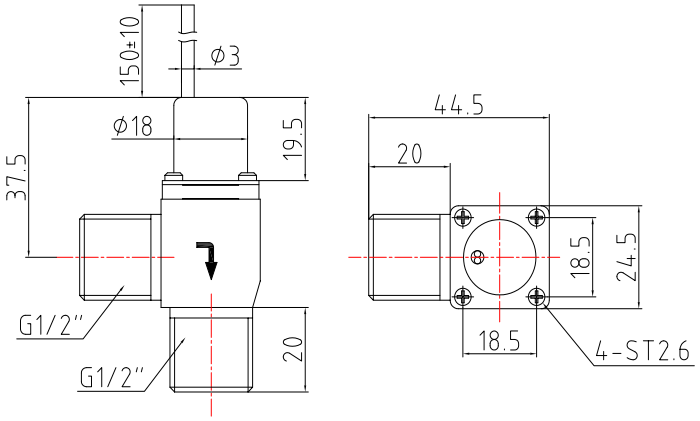



2MP090-15, POM MATERIAL

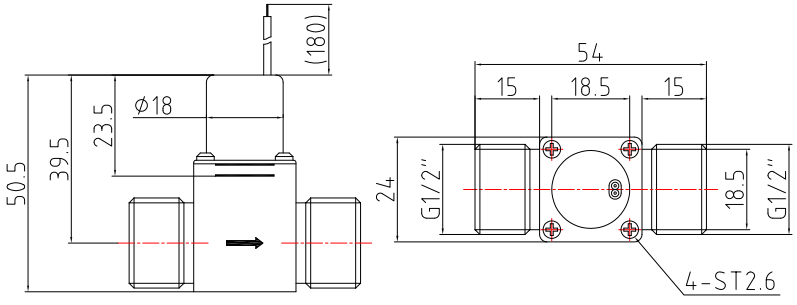



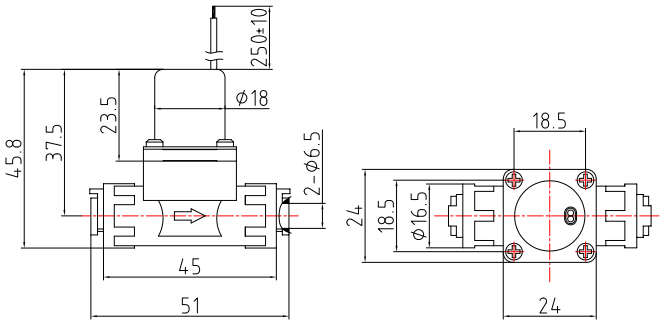

2MP090-14, POM MATERIAL



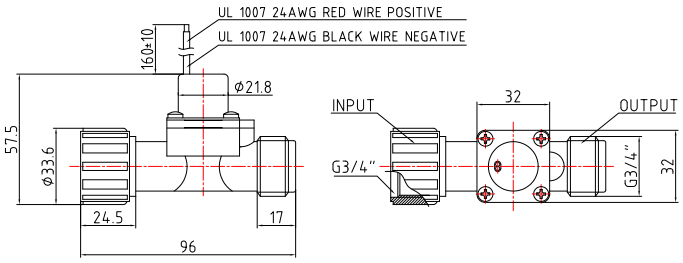

2MP200-20, NYLON MATERIAL



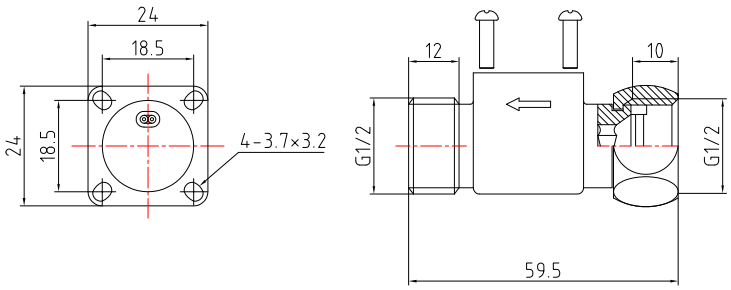

2MP150-15MF, BRASS MATERIAL



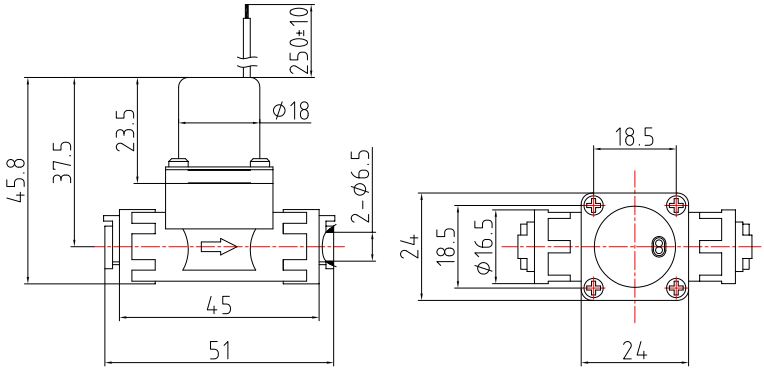

2MP200-20MF, BRASS MATERIAL

☎+86 574 82823826 | Fax +86 574 87157907 | sales@xhnotion.com | Web: www.xhnotion.com